WELDLINE

FLAIR®

The FLAIR® gouging torch is a high quality torch.
The airflow can be regulated on the torch.
The recommended air pressure is 7 bar.

EN 60974-11 type B
EN 60245-6

	Current (A)	Electrode Ø max	Cat N°
1 **FLAIR 600**	600	10 mm - 3/8”	**W000010136**
2 **FLAIR 1600**	1600	19 mm - 3/4”	**W000010118**



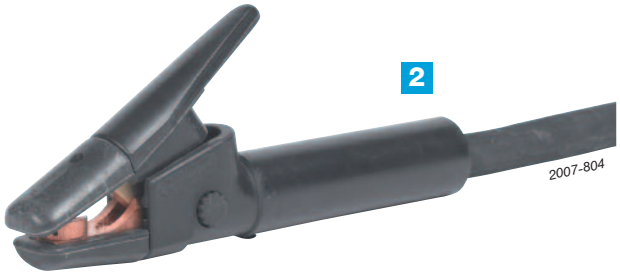

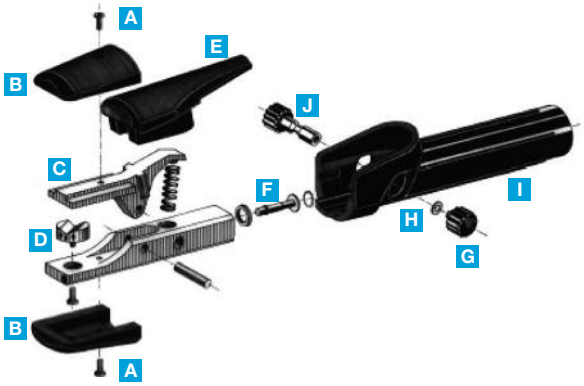

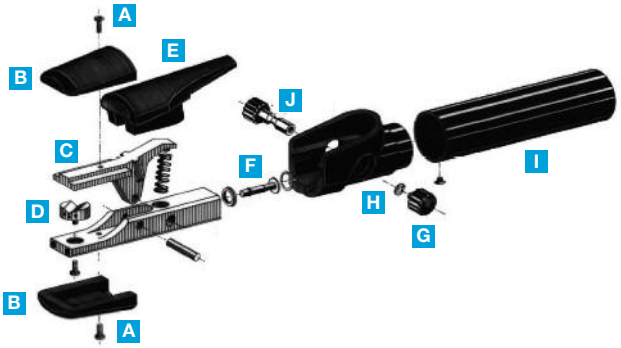

Spare parts

Description	FLAIR® 600	FLAIR® 1600
A Screw MRX 4 x 10 mm (10 pieces)	W000010124	
B Insulation cap (2 pieces)	W000010125	
C Brass lever	W000010126	
D Injection nozzle complete with taptite	W000010127	W000011130
E Lever insulation	W000010128	
F Valve	W000010129	
G Push-button	W000010130	
H Safety ring (10 pieces)	W000010131	
I Handle	W000010132	W000011127
J Push-button and link	W000010133	
Monocable	W000010134	W000011128

Air Liquide Welding reserves itself the right to embody modifications without prior notice.
The illustrations, descriptions and characteristics are given for information only and do not engage the responsibility of the constructor.

WELDLINE is an **Air Liquide Welding** trademark

PROFESSIONAL WELDING PRODUCTS BY AIR LIQUIDE WELDING