Flair 600 spare parts

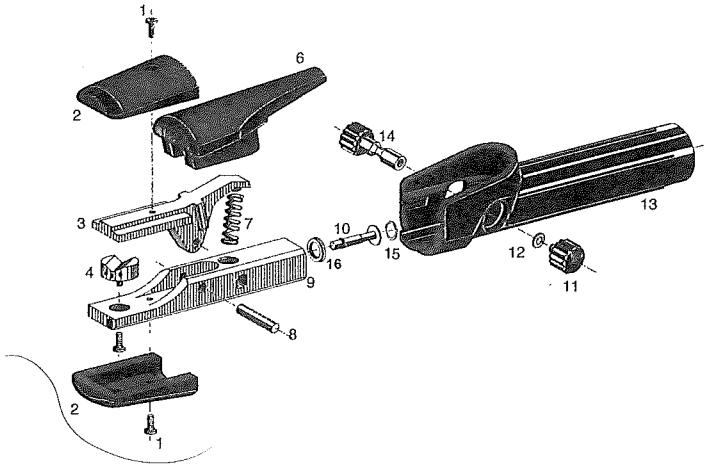

Product nr	Description	Draw nr	Packing
06.06.80626	Insulation cap.	2	2
06.06.80628	Screw MRX 4 x 10 mm Flair.	1	10
06.06.80606	Lever insulation.	6	1
06.06.80622	Push-button and link.	14	1
06.06.80430	Handle.	13	1
06.03.08323	Push-button.	11	1
06.03.08341	Safety ring.	12	10
06.04.08901	Copper sealing ring for Flair monocable and gouging torch.	15	1
06.06.80637	Valve.	10	1
06.03.08334	Valve seat.	16	1
06.06.80620	Hinge pin.	8	1
01.11.09001	Spring Flair.	7	10
06.06.80612	Body.	9	1
06.03.08355	Injection nozzle C-10, for round and flat electrodes, 10 mm.	4	1
06.03.08251	Injection nozzle, complete with taptite MRX M4 x 6 (01.11.09407).	4	1
06.06.80600	Brass lever.	3	1

Flair 1600 spare parts

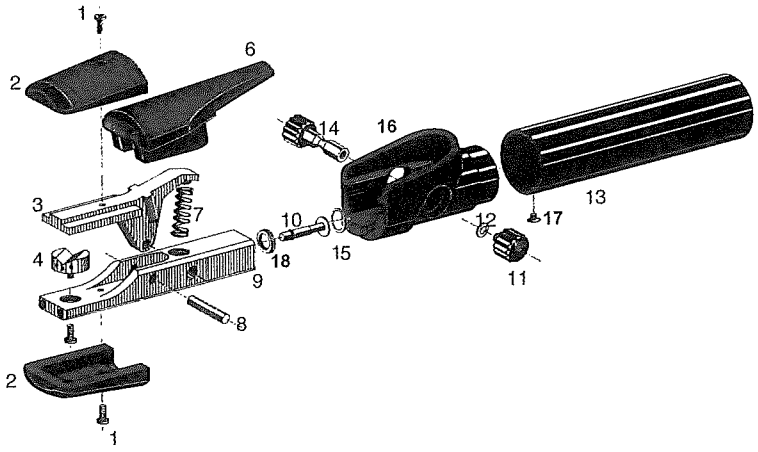

Product nr	Description	Draw nr	Packing
06.06.80626	Insulation cap.	2	2
06.06.80628	Screw MRX 4 x 10 mm.	1	10
06.06.80606	Lever insulation.	6	1
06.06.80622	Push-button and link.	14	1
06.06.81630	Handle gouging torch Flair 1600.	13/16/17	10
06.39.08533	Nylon screw M6 x 8.	17	10
06.03.08323	Push-button	11	1
06.03.08341	Safety ring.	12	10
06.04.08901	Copper sealing ring.	15	1
06.06.80637	Valve.	10	1
06.03.08334	Valve seat.	18	1
06.06.80620	Hinge pin.	8	1
06.06.81624	Spring.	7	25
06.06.81612	Body.	9	1
06.03.08550	Injection nozzle 3-gats complete with taptite MRX M4 x 6 (01.11.09407).	4	1
06.03.08356	Injection nozzle C-15, for round and flat electrodes, 15 mm.	4	1
06.03.08357	Injection nozzle C-20, for round and flat electrodes, 20 mm.	4	1
06.06.81600	Lever.	3	1

Flair 600/1600 monocables spare parts

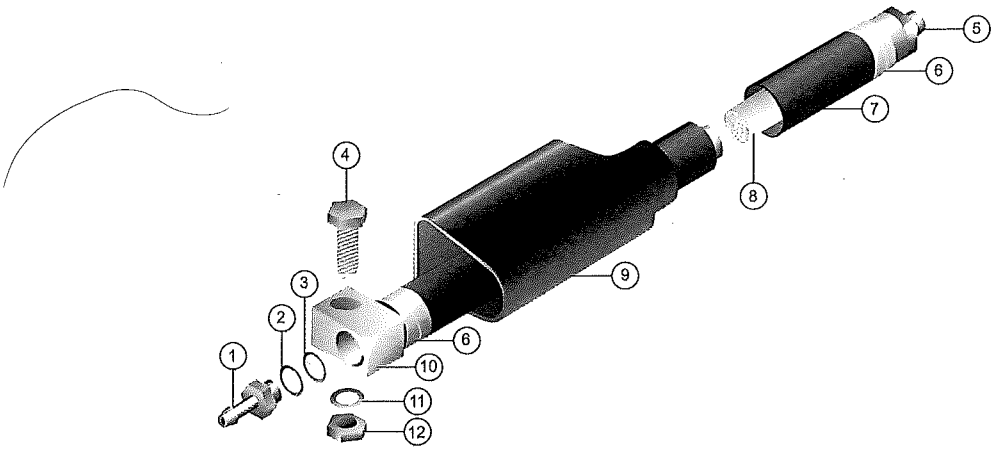

Product nr	Description	Draw nr	Packing
06.04.08905	Airhose inlet Flair 600/1600.	1	1
06.04.08901	Copper sealing ring Flair 600/1600.	2	1
06.04.08902	Sieve.	3	1
06.04.08910	Bolt and nut M10 x 25, for monocable of Flair 600.	4+12	1
06.04.08911	Bolt and nut M10 x 40, for monocable of Flair 1600.	4+12	1
06.04.08613	Swivel hose connection, torch side, Flair 600.	5	1
06.04.08731	Swivel hose connection, torch side, Flair 1600.	5	1
06.04.08732	Swivel connection, torch side, with stop, Flair 1600.	5	1
06.04.08622	Hose bushing, short Flair 600.	6	1
06.04.08716	Hose clamp (hose gouging torch Flair 1600).	6	1
06.04.08600	Hose monocable Flair 600, per meter.	7	1
06.04.08700	Hose monocable Flair 1600, per meter.	7	1
06.04.08610	Copper cable, 2.5 meter, Flair 600.	8	1
06.04.08810	Copper cable, 2.5 meter, Flair 1600.	8	1
06.04.08620	Rubber sleeve, Flair 600.	9	1
06.04.08720	Rubber sleeve, Flair 1600.	9	1
06.04.08624	Hose coupling, machine side Flair 600.	10	1
06.39.08715	Hose coupling, machine side, Flair 1600.	10	1
06.04.08907	Washer, Flair 600/1600.	11	10