INSTRUCTION MANUAL

Power Feed® 52

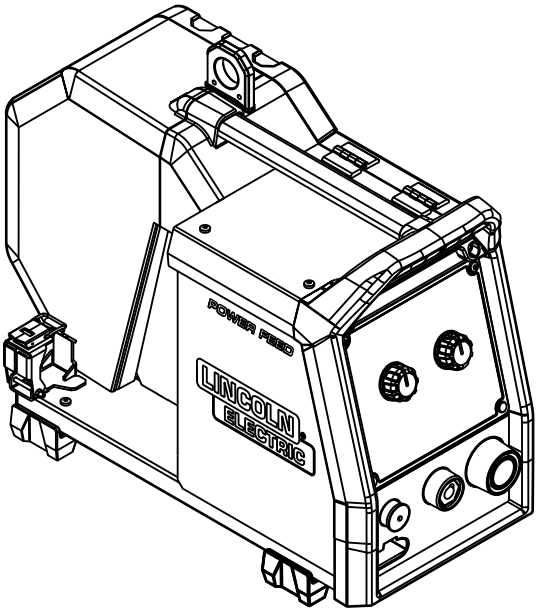

For use with Product/Code Numbers:

50764

Save for future reference

Date Purchased

Code: (ex: 10859)

Serial: (ex: U1060512345)

IM3224-B | Issue Date 08 - 2026
© Lincoln Global, Inc. All Rights Reserved.

Lincoln Electric Bester Sp. z o.o.
ul. Jana III Sobieskiego 19A, 58-260 Bielawa, Poland
www.lincolnelectric.eu



ISO OERLIKON AG Schweisstechnik
CH-5737 Menziken AG – Tel. +41 (0)62 771 83 05
E-Mail info@iso-oerlikon.ch – www.iso-oerlikon.ch

ONLINE ACCESS TO INSTRUCTION MANUAL

The current version of the instruction manual is available online at the following link:

https://www.lincolnelectric.com/en-GB/Operators-Manuals

It is recommended to use the online version as the most up-to-date source of information.

Contents

ONLINE ACCESS TO INSTRUCTION MANUAL iii

INSTALLATION ..... **SECTION A**
- INSTALLATION AND OPERATOR INSTRUCTIONS A-1
- TECHNICAL SPECIFICATIONS A-2
- INTRODUCTION A-3
- EXPLOITATION CONDITIONS A-3
- DUTY CYCLE AND OVERHEATING A-4
- INPUT SUPPLY CONNECTION A-4
- TRANSPORT AND LIFTING A-4

OPERATION ..... **SECTION B**
- MACHINE SYMBOLOGY B-1
- CONTROLS AND OPERATIONAL FEATURES B-3
- LOADING THE WIRE SPOOL B-5
- LOADING THE ELECTRODE WIRE B-5
- ADJUSTING THE BRAKE TORQUE OF THE SLEEVE B-6
- ADJUSTING PRESSURE ROLL FORCE B-7
- INSERTING ELECTRODE WIRE INTO WELDING GUN B-7
- CHANGING DRIVING ROLLS B-8
- GAS CONNECTION B-10
- GAS FLOW REGULATOR (GFR) B-11
- PENDANT BOX CONNECTION B-12

USER INTERFACE ..... **SECTION C**
- OVERVIEW C-1
- LOCATION OF THE USER INTERFACE C-1
- INTRODUCTION - U3 USER INTERFACE C-1
- U3 SYMBOLOGY C-2
- TERMINOLOGY C-3
- U3 USER INTERFACE CONTROLS AND INDICATORS C-4
- FIXED WELD MODES C-6
- JOBS C-7
- USER MEMORY C-8
- WELDING PARAMETERS MENU C-8
- TRIGGER OPERATING MENU C-13
- SELECTING THE WELD MODE C-16
- SAVING JOB TO USER MEMORY C-17
- CHANGING THE WELD MODE OR JOB C-19
- SETTINGS AND CONFIGURATION MENU C-21
- FILLING THE RESERVOIR AND WATER LINES C-32
- FILLING PROCEDURE FAILED C-36
- NO COOLANT FLOW C-36
- LOCKING THE USER INTERFACE C-37
- GMAW, FCAW-GS AND FCAW-SS PROCESS IN NON-SYNERGIC WELD MODES C-39
- GMAW AND FCAW-GS PROCESS IN SYNERGIC WELD MODES (CV) C-41
- WELDING HIGH PENETRATION SPEED (HPS™) PROCESS IN SYNERGIC WELD MODES C-43
- SPEED SHORT ARC (SSA™) PROCESS IN SYNERGIC WELD MODES C-45
- GMAW-P PROCESS IN SYNERGIC WELD MODES C-47
- SOFT SILENCE PULSE (SSP™) PROCESS IN SYNERGIC WELD MODES C-50

SMAW PROCESS..... C-53
GTAW / GTAW-PULSE PROCESS..... C-54
GOUGING..... C-56

CONNECTION OVERVIEW.....SECTION D
CONNECTION OVERVIEW..... D-2

ACCESSORIES AND OPTIONS.....SECTION E
ACCESSORIES AND OPTIONS.....E-1

MAINTENANCE..... SECTION F
MAINTENANCE..... F-1

TROUBLESHOOTING.....SECTION G
HOW TO USE TROUBLESHOOTING GUIDE.....G-1
TROUBLESHOOTING GUIDE..... G-1

APPENDIX
WIRING DIAGRAM
CUSTOMER ASSISTANCE POLICY

SAFETY INFORMATION

SAFETY DEPENDS ON YOU

Lincoln welding, cutting, and heating equipment is designed and built with safety in mind. However, your overall safety can be increased by proper installation and thoughtful operation on your part. DO NOT INSTALL, OPERATE OR REPAIR THIS EQUIPMENT WITHOUT READING THIS MANUAL AND THE SAFETY PRECAUTIONS CONTAINED THROUGHOUT. And, most importantly, think before you act and be careful.

⚠ DANGER

This statement indicates an imminently hazardous situation which, if not avoided, will result in death or serious injury.

⚠ WARNING

This statement indicates a potentially hazardous situation which, if not avoided, could result in death or serious injury.

⚠ CAUTION

This statement indicates a potentially hazardous situation which, if not avoided, could result in minor or moderate injury.

Notice: This statement indicates the possibility of damage to equipment if the potential risk is not avoided.

PLEASE EXAMINE CARTON AND EQUIPMENT FOR DAMAGE IMMEDIATELY

When this equipment is shipped, title passes to the purchaser upon receipt by the carrier. Consequently, claims for material damaged in shipment must be made by the purchaser against the transportation company at the time the shipment is received.

KEEP YOUR HEAD OUT OF THE FUMES



- **DON'T** get too close to the weld. Use corrective lenses if necessary to stay a reasonable distance away from the weld.
- **USE ENOUGH VENTILATION** or exhaust at the weld, or both, to keep the fumes and gases from your breathing zone and the general area.
- **IN A LARGE ROOM OR OUTDOORS** , natural ventilation may be adequate if you keep your head out of the fumes.
- **USE NATURAL DRAFTS** or fans to keep the fumes away from your face.
- **READ** and obey the Safety Data Sheet (SDS) and the warning label that appears on all containers of welding materials.

If you develop unusual symptoms, see your supervisor. Perhaps the welding atmosphere and ventilation system should be checked.

WEAR CORRECT EYE, EAR AND BODY PROTECTION



- **PROTECT** your eyes and face with properly fitted and with proper grade of filter plate (See ANSI Z49.1).
- **PROTECT** your body from welding spatter and arc flash with protective clothing including woolen clothing, flame-proof apron and gloves, leather leggings, and high boots.
- **PROTECT** others from spatter, flash, and glare with protective screens or barriers.
- **PROTECT** your eyes and face with welding helmet
- **IN SOME AREAS**, protection from noise may be appropriate.
- **BE SURE** protective equipment is in good condition.



- **AT ALL TIMES**, wear safety glasses in work area.
- **DO NOT WELD, CUT, OR HEAT** containers or materials which previously had been in contact with hazardous substances unless they are properly cleaned. This is extremely dangerous.

- **DO NOT WELD, CUT, OR HEAT** painted or plated parts unless special precautions with ventilation have been taken. They can release highly toxic fumes or gases.
- **PROTECT** compressed gas cylinders from excessive heat, mechanical shocks, and arcs; fasten cylinders so they cannot fall.
- **BE SURE** cylinders are never grounded or part of an electrical circuit.
- **REMOVE** all potential fire hazards from welding area.



- **ALWAYS HAVE FIRE FIGHTING EQUIPMENT READY FOR IMMEDIATE USE AND KNOW HOW TO USE IT.**

CALIFORNIA PROPOSITION 65 WARNINGS

⚠ WARNING



Breathing diesel engine exhaust exposes you to chemicals known to the State of California to cause cancer and birth defects, or other reproductive harm.

Always start and operate the engine in a well-ventilated area.

If in an exposed area, vent the exhaust to the outside.

Do not modify or tamper with the exhaust system.

Do not idle the engine except as necessary.

⚠ WARNING



This product, when used for welding or cutting, produces fumes or gases which contain chemicals known to the State of California to cause birth defects and, in some cases, cancer. (California Health & Safety Code § 25249.5 et seq.)

For more information go to https://www.p65warnings.ca.gov

ARC WELDING CAN BE HAZARDOUS

PROTECT YOURSELF AND OTHERS FROM POSSIBLE SERIOUS INJURY OR DEATH. KEEP CHILDREN AWAY. PACEMAKER WEARERS SHOULD CONSULT WITH THEIR DOCTOR BEFORE OPERATING.

Read and understand the following safety highlights. For additional safety information, it is strongly recommended that you purchase a copy of "Safety in Welding & Cutting - ANSI Standard Z49.1" from the American Welding Society, P.O. Box 351040, Miami, Florida 33135 or CSA Standard W117.2. A Free copy of "Arc Welding Safety" booklet E205 is available from the Lincoln Electric Company, 22801 St. Clair Avenue, Cleveland, Ohio 44117-1199.

BE SURE THAT ALL INSTALLATION, OPERATION, MAINTENANCE AND REPAIR PROCEDURES ARE PERFORMED ONLY BY QUALIFIED INDIVIDUALS.

FOR ENGINE POWERED EQUIPMENT



- Turn the engine off before troubleshooting and maintenance work unless the maintenance work requires it to be running.
- Do not add the fuel near an open flame welding arc or when the engine is running. Stop the engine and allow it to cool before refueling to prevent spilled fuel from vaporizing on contact with hot engine parts and igniting. Do not spill fuel when filling tank. If fuel is spilled, wipe it up and do not start engine until fumes have been eliminated.



- Keep all equipment safety guards, covers and devices in position and in good repair. Keep hands, hair, clothing and tools away from V-belts, gears, fans and all other moving parts when starting, operating or repairing equipment.



- In some cases it may be necessary to remove safety guards to perform required maintenance. **REMOVE GUARDS ONLY** when necessary and replace them when the maintenance requiring their removal is complete. Always use the greatest care when working near moving parts.
- **DO NOT** put your hands near the engine fan. Do not attempt to override the governor or idler by pushing on the throttle control rods while the engine is running.
- To prevent accidentally starting gasoline engines while turning the engine or welding generator during maintenance work, disconnect the spark plug wires, distributor cap or magneto wire as appropriate.



- To avoid scalding, do not remove the radiator pressure cap when the engine is hot.



- Generator exhaust contains carbon monoxide. This is a poison you cannot see or smell.
- Using a generator indoors **CAN KILL YOU IN MINUTES**.
- **NEVER** use inside a home or garage, EVEN IF doors and windows are open.

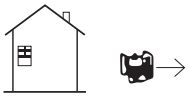

- **ONLY** use **OUTSIDE** and far away from windows, doors and vents.
- Avoid other generator hazards. **READ MANUAL BEFORE USE**.

ELECTRIC AND MAGNETIC FIELDS MAY BE DANGEROUS



- Electric current flowing through any conductor causes localized Electric and Magnetic Fields (EMF). Welding and heating current creates EMF fields around cables and equipment.
- EMF fields may interfere with some pacemakers, and welders having a pacemaker should consult their physician before welding.
- Exposure to EMF fields in welding may have other health effects which are now not known.

All welders should use the following procedures in order to minimize exposure to EMF fields from the welding circuit:

- Route the electrode and work cables together - Secure them with tape when possible.
- Never coil the electrode lead around your body.
- Do not place your body between the electrode and work cables. If the electrode cable is on your right side, the work cable should also be on your right side.
- Connect the work cable to the workpiece as close as possible to the area being welded.
- Do not work next to welding power source.

ELECTRIC SHOCK CAN KILL



- The electrode and work (or ground) circuits are electrically “hot” when the welder is on. Do not touch these “hot” parts with your bare skin or wet clothing. Wear dry, hole-free gloves to insulate hands.
- Insulate yourself from work and ground using dry insulation. Make certain the insulation is large enough to cover your full area of physical contact with work and ground.

In addition to the normal safety precautions, if welding must be performed under electrically hazardous conditions (in damp locations or while wearing wet clothing; on metal structures such as floors, gratings or scaffolds; when in cramped positions such as sitting, kneeling or lying, if there is a high risk of unavoidable or accidental contact with the workpiece or ground) use the following equipment:

- Semiautomatic DC Constant Voltage (Wire) Welder.
- DC Manual (Stick) Welder.
- AC Welder with Reduced Voltage Control.
- In semiautomatic or automatic wire welding, the electrode, electrode reel, welding head, nozzle or semiautomatic welding gun are also electrically “hot”.
- Always be sure the work cable makes a good electrical connection with the metal being welded. The connection should be as close as possible to the area being welded.
- Ground the work or metal to be welded to a good electrical (earth) ground.
- Maintain the electrode holder, work clamp, welding cable and welding machine in good, safe operating condition. Replace damaged insulation.
- Never dip the electrode in water for cooling.

- Never simultaneously touch electrically “hot” parts of electrode holders connected to two welders because voltage between the two can be the total of the open circuit voltage of both welders.
- When working above floor level, use a safety belt to protect yourself from a fall should you get a shock.
- **Also see** WELDING AND CUTTING SPARKS CAN CAUSE FIRE OR EXPLOSION **and** FOR ELECTRICALLY POWERED EQUIPMENT

ARC RAYS CAN BURN



- Use a shield with the proper filter and cover plates to protect your eyes from sparks and the rays of the arc when welding or observing open arc welding. Headshield and filter lens should conform to ANSI Z87.1 standards.
- Use suitable clothing made from durable flame-resistant material to protect your skin and that of your helpers from the arc rays.
- Protect other nearby personnel with suitable, non-flammable screening and/or warn them not to watch the arc nor expose themselves to the arc rays or to hot spatter or metal.

FUMES AND GASES CAN BE DANGEROUS



Welding may produce fumes and gases hazardous to health. Avoid breathing these fumes and gases. When welding, keep your head out of the fume. Use enough ventilation and/or exhaust at the arc to keep fumes and gases away from the breathing zone.

- **When welding hardfacing (see instructions on container or SDS) or on lead or cadmium plated steel and other metals or coatings which produce highly toxic fumes, keep exposure as low as possible and within applicable OSHA PEL and ACGIH TLV limits using local exhaust or mechanical ventilation unless exposure assessments indicate otherwise. In confined spaces or in some circumstances, outdoors, a respirator may also be required. Additional precautions are also required when welding on galvanized steel.**
- The operation of welding fume control equipment is affected by various factors including proper use and positioning of the equipment, maintenance of the equipment and the specific welding procedure and application involved. Worker exposure level should be checked upon installation and periodically thereafter to be certain it is within applicable OSHA PEL and ACGIH TLV limits.
- Do not weld in locations near chlorinated hydrocarbon vapors coming from degreasing, cleaning or spraying operations. The heat and rays of the arc can react with solvent vapors to form phosgene, a highly toxic gas, and other irritating products.
- Shielding gases used for welding can displace air and cause injury or death. Always use enough ventilation, especially in confined areas, to insure breathing air is safe.
- Read and understand the manufacturer’s instructions for this equipment and the consumables to be used, including the Safety Data Sheet (SDS) and follow your employer’s safety practices. SDS forms are available from your welding distributor or from the manufacturer.
- Also see FOR ENGINE POWERED EQUIPMENT

WELDING AND CUTTING SPARKS CAN CAUSE FIRE OR EXPLOSION



- Remove fire hazards from the welding area. If this is not possible, cover them to prevent the welding sparks from starting a fire. Remember that welding sparks and hot materials from welding can easily go through small cracks and openings to adjacent areas. Avoid welding near hydraulic lines. Have a fire extinguisher readily available.
- Where compressed gases are to be used at the job site, special precautions should be used to prevent hazardous situations. Refer to **“Safety in Welding and Cutting” (ANSI Standard Z49.1)** and the operating information for the equipment being used.

- When not welding, make certain no part of the electrode circuit is touching the work or ground. Accidental contact can cause overheating and create a fire hazard.
- Do not heat, cut or weld tanks, drums or containers until the proper steps have been taken to ensure that such procedures will not cause flammable or toxic vapors from substances inside. They can cause an explosion even though they have been “cleaned”. For information, purchase “Recommended Safe Practices for the Preparation for Welding and Cutting of Containers and Piping That Have Held Hazardous Substances”, **AWS F4.1** from the American Welding Society.
- Vent hollow castings or containers before heating, cutting or welding. They may explode.
- Sparks and spatter are thrown from the welding arc. Wear oil free protective garments such as leather gloves, heavy shirt, cuff-less trousers, high shoes and a cap over your hair. Wear ear plugs when welding out of position or in confined places. Always wear safety glasses with side shields when in a welding area.
- Connect the work cable to the work as close to the welding area as practical. Work cables connected to the building framework or other locations away from the welding area increase the possibility of the welding current passing through lifting chains, crane cables or other alternate circuits. This can create fire hazards or overheat lifting chains or cables until they fail.
- **Read and follow NFPA 51B** “Standard for Fire Prevention During Welding, Cutting and Other Hot Work”, available from NFPA, 1 Batterymarch Park, PO box 9101, Quincy, MA 022690-9101.
- **DO NOT** use a welding power source for pipe thawing.

CYLINDER MAY EXPLODE IF DAMAGED



- Use only compressed gas cylinders containing the correct shielding gas for the process used and properly operating regulators designed for the gas and pressure used. All hoses, fittings, etc. should be suitable for the application and maintained in good condition.
- Always keep cylinders in an upright position securely chained to an undercarriage or fixed support.

Cylinders should be located:

- Away from areas where they may be struck or subjected to physical damage.
- A safe distance from arc welding or cutting operations and any other source of heat, sparks, or flame.
- Never allow the electrode, electrode holder or any other electrically “hot” parts to touch a cylinder.
- Keep your head and face away from the cylinder valve outlet when opening the cylinder valve.
- Valve protection caps should always be in place and hand tight except when the cylinder is in use or connected for use.
- Read and follow the instructions on compressed gas cylinders, associated equipment, and CGA publication P-l, “Precautions for Safe Handling of Compressed Gases in Cylinders,” available from the Compressed Gas Association, 14501 George Carter Way Chantilly, VA 20151.

FOR ELECTRICALLY POWERED EQUIPMENT



- Turn off input power using the disconnect switch at the fuse box before working on the equipment.
- Install equipment in accordance with the U.S. National Electrical Code, all local codes and the manufacturer’s recommendations.
- Ground the equipment in accordance with the U.S. National Electrical Code and the manufacturer’s recommendations.

BATTERY HANDLING, STORAGE, AND DISPOSAL



Batteries can be flammable substances such as lithium or other organic solvents, which may result in overheating, rupture, or combustion. Failure to follow the battery manufactures instructions may result in fire, personal injury, and damage to property if used improperly.

- DO NOT short circuit, disassemble, deform, or heat batteries.
- DO NOT attempt to recharge batteries unless they are specifically marked as "rechargeable".
- DO NOT use or charge the battery if it appears to be leaking, deformed or damaged in any way.
- Store in a cool location. Keep batteries away from direct sunlight, high temperature, and high humidity.
- Immediately discontinue use of the battery if, while using, charging, or storing the battery, the battery emits an unusual smell, feels hot, changes color, changes shape, or appears abnormal in any other way.
- Keep batteries out of reach of children, should a child swallow a battery, consult a physician immediately.
- Recycle or dispose of batteries in accordance with local and federal laws.

FOR LASER EMITTING EQUIPMENT



- Hazardous Class 4 (IV) laser products emit invisible, infrared laser radiation which can permanently damage the eye's retina and/or cornea, burn skin, and pose a fire risk. End users shall assign a qualified Laser Safety Officer (LSO) who has the certifications required by applicable law/standards, have a documented Laser Safety Program and have a Laser Controlled Area (LCA) that confirms to ANSI Z136.1 & Z136.9.
- Do not operate laser before end user's LSO has completed a risk assessment and all the prescribed Risk Mitigations measures have been fully implemented. Ensure the laser is operated/ demonstrated safely by trained personnel and that the environment surrounding the laser welding cell or laser-controlled area is safe for people nearby when the laser is in operation.
- Never point the laser at yourself or others. Never look directly into a laser aperture, even if wearing full eye protection.
- All persons inside LCA must wear proper PPE to avoid eye or skin exposure to laser radiation. The end user's LSO shall select proper PPE including, but not limited to, heat-resistant gloves, flame-resistant clothing, laser safety eye wear and laser-safe helmets that conform to ANSI Z136.1 Optical Density requirements for the wavelength and output power of the laser in use. Standard safety glasses and welding helmets DO NOT provide adequate protection from laser beam hazards. Always inspect PPE for damage or improper fit before use.
- Only qualified persons shall install, operate or service this unit per ANSI Z136.1 standards and your LSO's instruction. Read and follow all labels and manuals before installing, operating, or servicing hand held any laser welding equipment.
- Do not operate outside of a LCA, or if the laser protective housing is modified or damaged, or if safety interlocks have been bypassed or otherwise defeated. Inspect all equipment and LCA for damage or tampering prior to use.
- Reflected beams from the laser can damage eyes and skin and can pose a fire risk. Prior to use, the LCA should be assessed by the LSO to understand the surfaces where hazardous reflected beams can exist. Never position yourself or flammable material in the anticipated laser beam path and take extra precautions when working on reflective materials like aluminum and stainless steel.
- Follow all standards, individual facility or building regulations, and national, state, and local codes.

DEALER LOCATOR & PRODUCT REGISTRATION

Register your machine:

https://www.lincolnelectric.com/register

Authorized Service and Distributor Locator:

https://www.lincolnelectric.com/locator

ADDITIONAL SAFETY INFORMATION

Refer to http://www.lincolnelectric.com/safety for additional safety information

WEEE



Do not dispose of electrical equipment together with normal waste! In observance of European Directive 2012/19/EC on Waste Electrical and Electronic Equipment (WEEE) and its implementation in accordance with national law, electrical equipment that has reached the end of its life must be collected separately and returned to an environmentally compatible recycling facility. As the owner of the equipment, you should get information on approved collection systems from our local representative.

By applying this European Directive you will protect the environment and human health!

ELECTROMAGNETIC COMPATIBILITY (EMC)

This machine has been designed in accordance with all relevant directives and standards. However, it may still generate electromagnetic disturbances that can affect other systems like telecommunications (telephone, radio, and television) or other safety systems. These disturbances can cause safety problems in the affected systems. Read and understand this section to eliminate or reduce the amount of electromagnetic disturbance generated by this machine.

⚠ WARNING



This machine has been designed to operate in an industrial area. To operate in a domestic area it is necessary to observe particular precautions to eliminate possible electromagnetic disturbances. The operator must install and operate this equipment as described in this manual. If any electromagnetic disturbances are detected the operator must put in place corrective actions to eliminate these disturbances with, if necessary, assistance from Lincoln Electric.

Before installing the machine, the operator must check the work area for any devices that may malfunction because of electromagnetic disturbances. Consider the following.

- Input and output cables, control cables, and telephone cables that are in or adjacent to the work area and the machine.
- Radio and/or television transmitters and receivers. Computers or computer controlled equipment.
- Safety and control equipment for industrial processes. Equipment for calibration and measurement.
- Personal medical devices like pacemakers and hearing aids.
- Check the electromagnetic immunity for equipment operating in or near the work area. The operator must be sure that all equipment in the area is compatible. This may require additional protection measures.
- The dimensions of the work area to consider will depend on the construction of the area and other activities that are taking place.

Consider the following guidelines to reduce electromagnetic emissions from the machine.

- Connect the machine to the input supply according to this manual. If disturbances occur, it may be necessary to take additional precautions such as filtering the input supply.
- The output cables should be kept as short as possible and should be positioned together. If possible connect the work piece to ground in order to reduce the electromagnetic emissions. The operator must check that connecting the work piece to ground does not cause problems or unsafe operating conditions for personnel and equipment.
- Shielding of cables in the work area can reduce electromagnetic emissions. This may be necessary for special applications.

⚠ WARNING



EMC classification of this product is class A in accordance with electromagnetic compatibility standard EN 60974-10 and therefore the product is designed to be used in an industrial environment only.

⚠ WARNING



The Class A equipment is not intended for use in residential locations where the electrical power is provided by the public low-voltage supply system. There can be potential difficulties in ensuring electromagnetic compatibility in those locations, due to conducted as well as radio-frequency disturbances.

INSTALLATION

INSTALLATION AND OPERATOR INSTRUCTIONS

⚠ WARNING



Read this entire section before installing or operating the machine.

Read and understand this instruction manual before installing, operating, or servicing this equipment.

Keep this instruction manual available for future reference.

⚠ WARNING



Do not operate with covers removed.

Do not operate if cables are wet or immersed in water.

Do not touch electrically “hot” parts inside the machine.

Have qualified personnel do the installation, maintenance and troubleshooting work.

⚠ CAUTION



Risk from electrical current!

If welding is carried out alternately using different methods and if a welding torch and an electrode holder remain connected to the machine, the open-circuit/welding voltage is applied simultaneously on all cables.

The torch and the electrode holder should therefore always be placed on an insulated surface before starting work and during breaks.

Do not touch two welding guns, two electrode holders, or a welding gun and an electrode holder at the same time.

TECHNICAL SPECIFICATIONS

NAME			INDEX
Power Feed® 52			**K14462-1**
INPUT			
Input Voltage U_1	**Input Current I_1**		**EMC Class**
40 Vdc	4 Adc		A
RATED OUTPUT AT 40°C			
Duty Cycle (based on a 10 min. period)		**Output Current I_2**	
100%		420 A	
60%		500 A	
OUTPUT RANGE			
Welding Current Range		**Peak Open Circuit Voltage**	
5÷500 A		113 Vdc or Vac peak	
DIMENSIONS AND WEIGHT			
Height	**Width**	**Length**	**Weight**
460 mm	245 mm	600 mm	17 kg
WIRE FEED SPEED RANGE / ROLLS TYPE			
WFS range	**Drive rolls**	**Drive roll diameter**	
1.5÷25 m/min	4	∅37	
WIRE DIAMETER			
Solid Wires	**Aluminum Wires**	**Cored Wires**	
0.6÷1.6 mm	1.0÷1.6 mm	0.9÷1.6 mm	
OTHERS			
Operating Temperature	**Storage Temperature**	**Protection Rating**	**Maximum Gas Pressure**
from -10 °C to +40 °C	from -25 °C to 55°C	IP23	0.5 MPa (5 bar)

INTRODUCTION

Power Feed® 52 is a digital wire feeder designed to work with the following Lincoln Electric power sources and cooling unit:

- **SPEEDTEC® 400S**
- **SPEEDTEC® 500S**
- **Cool Arc® 60s**

The **ArcLink®** protocol is used for communication between the power source and the wire feeder. All signals from the power source are displayed on the User Interface located in the wire feeder machine.

When used with a compatible power source, the system supports the following welding processes:

- GMAW (MIG/MAG)
- FCAW-GS / FCAW-SS
- SMAW (MMA)
- GTAW (lift TIG)
- CAG (gouging).

The complete package includes:

- Wire feeder.
- USB memory with operator's manual.
- Easy Start.

Recommended equipment is listed in the ACCESSORIES AND OPTIONS on page E-1 section and is available for separate purchase.

EXPLOITATION CONDITIONS

This machine can operate in harsh environments. However, it is important to use the following simple preventive measures that will ensure its long life and reliable operation:

- Do not place or operate this machine on a surface with an incline higher than 15° from horizontal.
- Do not use this machine for pipe thawing.
- This machine must be located where there is free circulation of clean air without restrictions for air movement. Do not cover the machine with paper, cloth or rags when switched on.
- Dirt and dust that can be drawn into the machine should be kept away from the item.
- This machine has a protection rating of IP23. Keep it dry when possible and do not place it on a wet ground or in puddles.
- Locate the machine away from a radio controlled machinery. Normal operation may adversely affect the operation of a nearby radio controlled machinery, which may result in injury or equipment damage. Read the section on electromagnetic compatibility in this manual.
- Do not operate in areas with an ambient temperature greater than 40°C.

DUTY CYCLE AND OVERHEATING

The duty cycle of a welding machine is the percentage of time in a 10 minute cycle at which the user can operate the machine at rated welding current.

Example: 60% duty cycle:

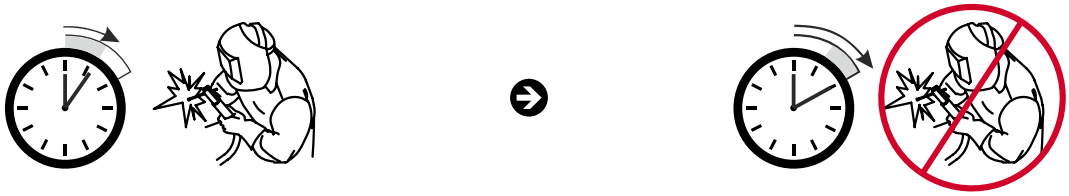

Welding for 6 minutes

Break for 4 minutes

Excessive extension of the duty cycle will cause the thermal protection circuit to activate.

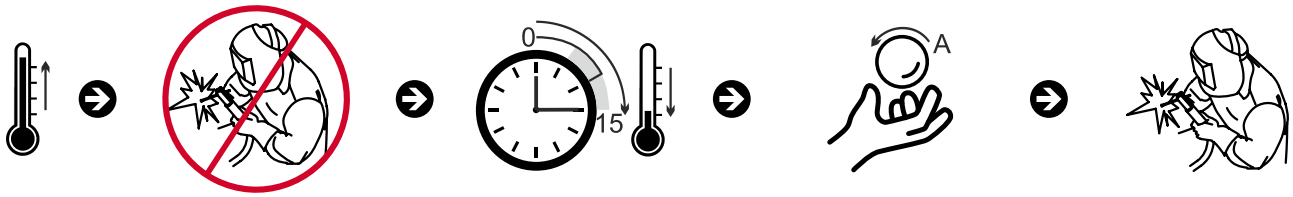

Minutes

or decrease Duty Cycle

INPUT SUPPLY CONNECTION

Check the input voltage, phase, and frequency of the power source that will be connected to this wire feeder. The acceptable level of input voltage is indicated in the TECHNICAL SPECIFICATIONS on page A-2 and on the rating plate of the power source. Verify the connection of grounding wires from the power source to the input source.

TRANSPORT AND LIFTING

Note: During transportation and storage, the ambient temperature must be within the recommended range (refer to TECHNICAL SPECIFICATIONS on page A-2 section).

⚠ CAUTION

To prevent freeze damage and coolant leakage, drain the coolant from the cooler reservoir before transport.

⚠ WARNING

Observe all safety precautions when lifting the equipment.

Follow all applicable local regulations.

⚠ WARNING

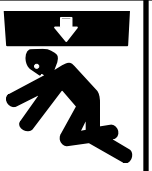

Falling equipment can cause injury and damage to the unit.

Preparation to transport and lifting

- Switch off the equipment and disconnect it from the power supply.
- Drain the coolant completely.
- Remove the wire feeder, wire spool, gas cylinder, and all loose components before transport.

After transport and lifting

- Inspect the equipment for visible damage before commissioning.
- Do not operate the equipment if it is damaged.
- Have all repairs performed by qualified personnel before use.

Transport and lifting requirements

- Use only approved lifting equipment with sufficient rated capacity.
- Inspect all lifting equipment before use.
- Ensure that the equipment is stable and properly secured during transport.
- Ensure that the load is stable and evenly distributed before lifting.
- Use a spreader beam (traverse) and appropriately rated lifting slings when lifting with a crane.
- Attach lifting chains or straps only to designated lifting points.
- Use the dedicated lifting eye.
- Keep personnel clear of the equipment during lifting operations.
- Perform lifting operations only by trained and authorized personnel.

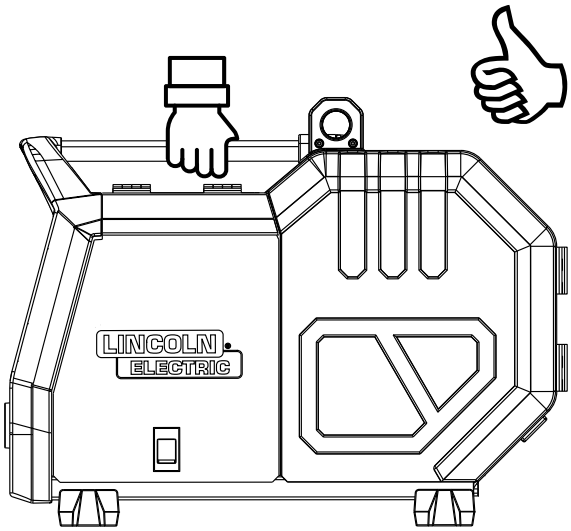

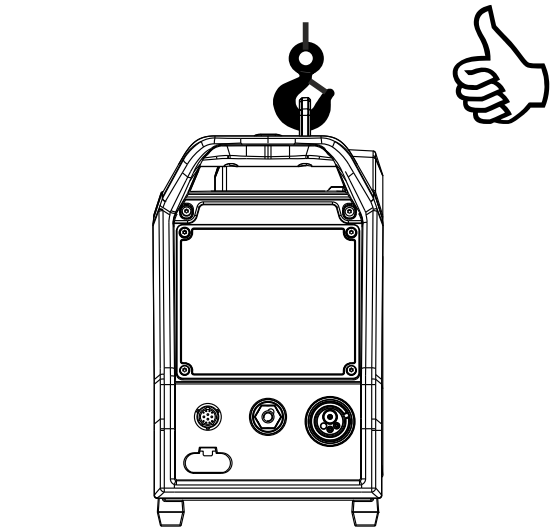

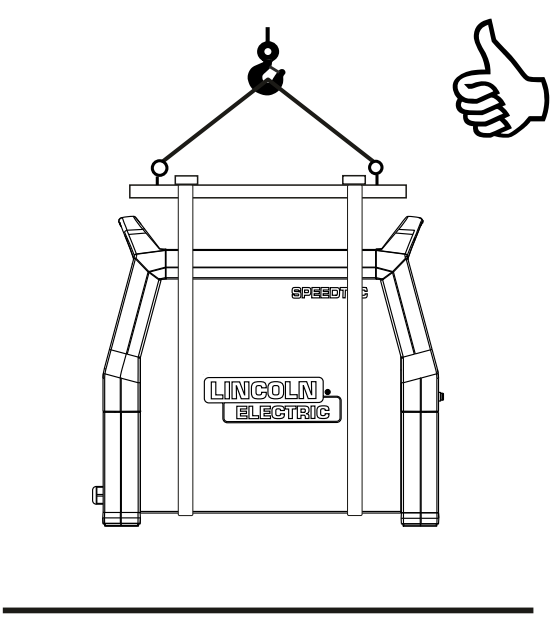

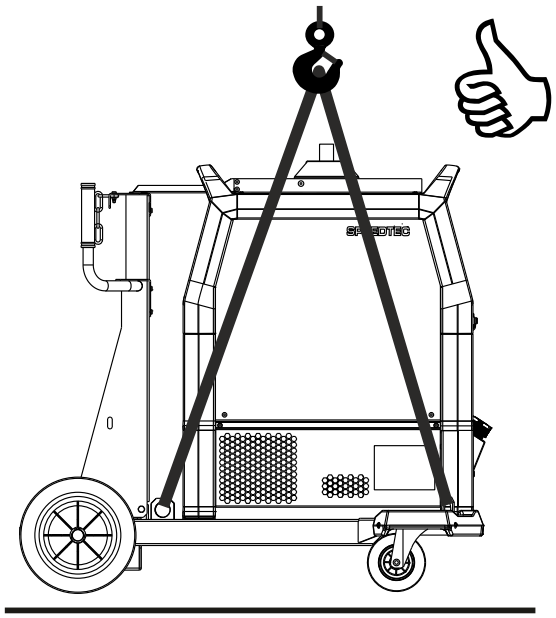

Prohibited actions

- Do not lift any equipment using transport handles.
- Do not use handles for lifting by crane or hoist.
- Do not use unauthorized lifting points.
- Do not lift equipment that is not properly secured.
- Do not lift equipment with loose components attached.
- Do not lift the system if a gas cylinder or wire feeder is installed on the transport cart.
- Do not stand under or near suspended loads.
- Do not attempt to lift the equipment unless the load is stable and balanced.

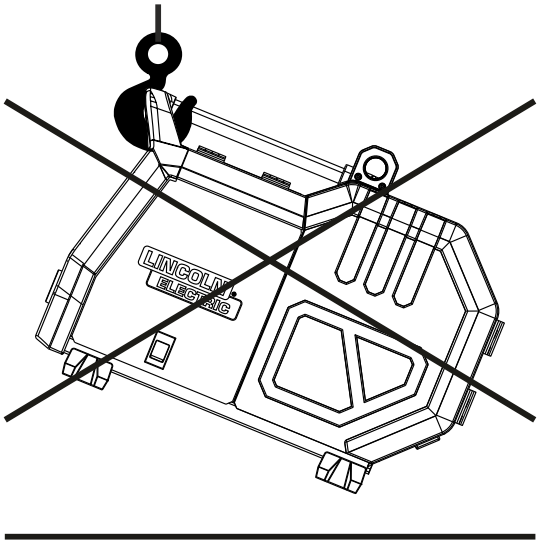

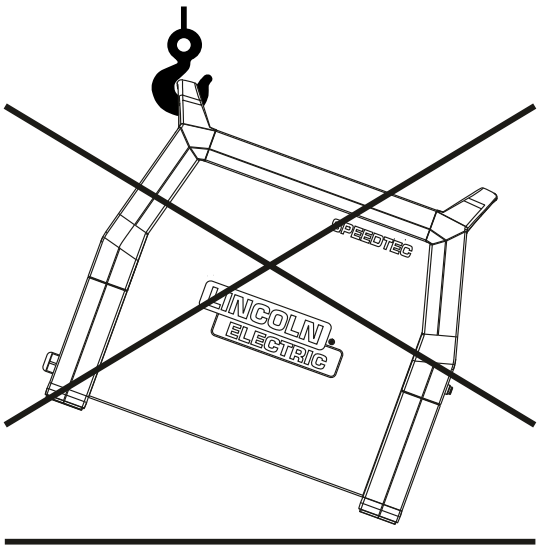

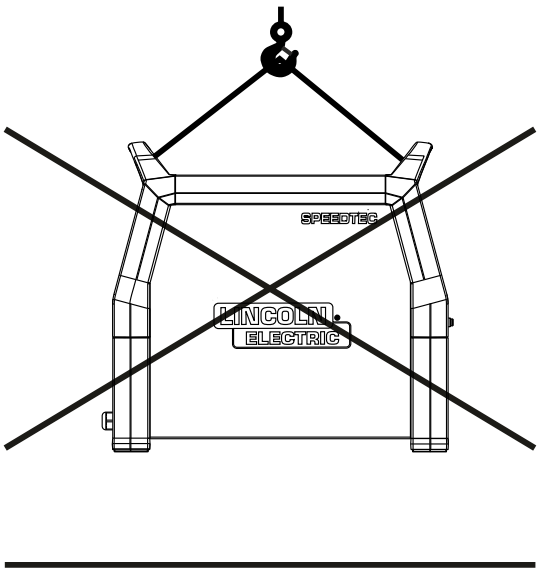
SPEEDTEC
LINCOLN
ELECTRIC

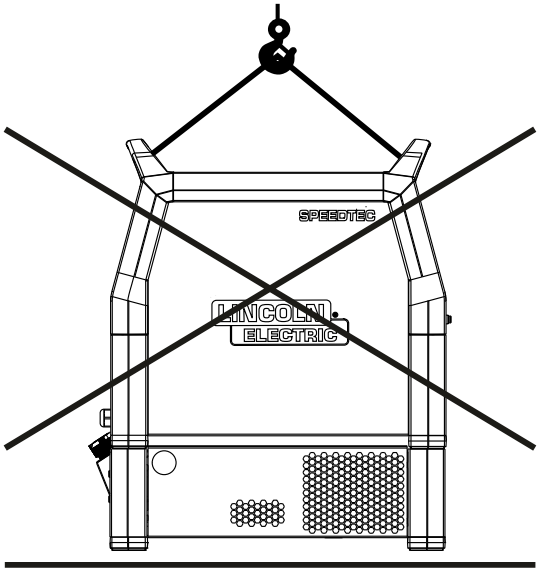
SPEEDTEC
LINCOLN
ELECTRIC

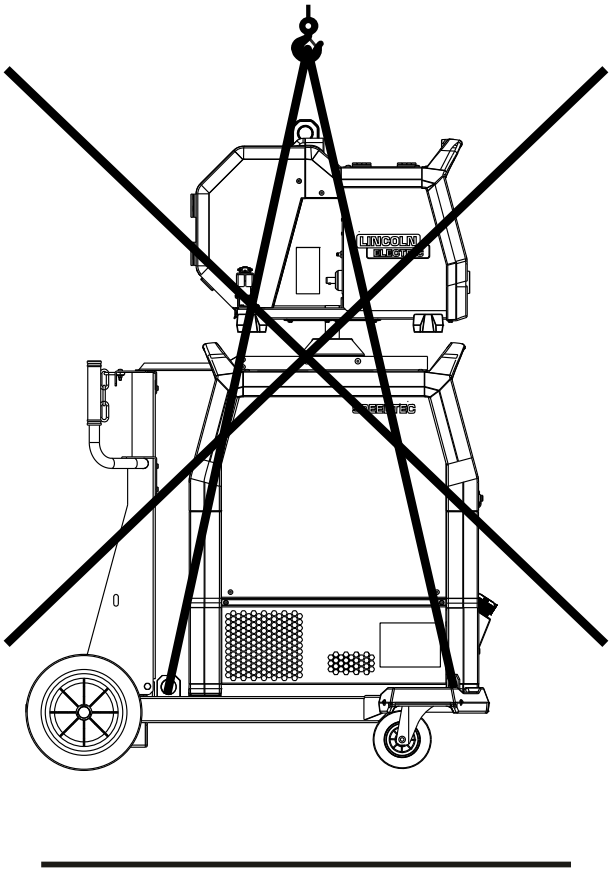
LINCOLN
SPEEDTEC

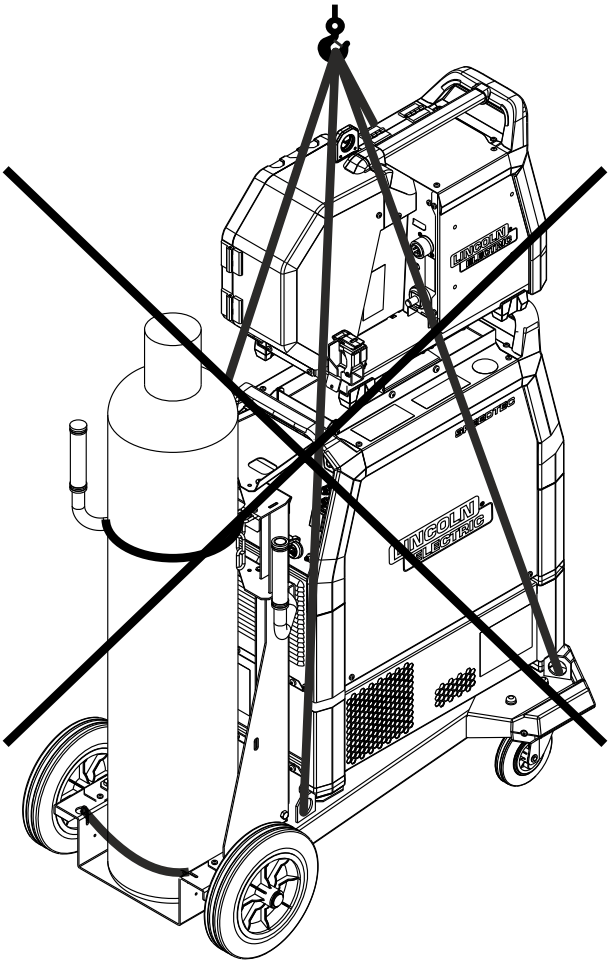
LINCOLN
LINCOLN

OPERATION

MACHINE SYMBOLOGY

GRAPHIC SYMBOLS THAT APPEAR ON THIS MACHINE OR IN THIS MANUAL			
	WARNING OR CAUTION		READ INSTRUCTION MANUAL
	ELECTRIC SHOCK CAN KILL		SHOCK HAZARD
	ARC RAYS CAN BURN		ELECTRIC AND MAGNETIC FIELDS MAY BE DANGEROUS
	FUMES AND GASES CAN BE DANGEROUS		WELDING SPARKS CAN CAUSE FIRE OR EXPLOSION
	WELDED MATERIALS CAN BURN		CYLINDER MAY EXPLODE IF DAMAGED
	MOVING PARTS ARE DANGEROUS		MOVING PARTS ARE DANGEROUS
	EURO SOCKET	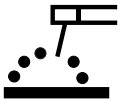	SMAW / CAG OUTPUT SOCKET
	COOLANT INLET		COOLANT OUTLET
	INPUT VOLTAGE		GAS INLET
	COLD INCH		GAS PURGE
	REMOTE CONTROL		

IP	INGRESS PROTECTION CODE	⎓	DIRECT CURRENT
X	DUTY CYCLE	I_2	OUTPUT CURRENT
U_1	INPUT VOLTAGE	I_1	INPUT CURRENT
CE	COMPLIANCE WITH EU DIRECTIVES	EAC	COMPLIANCE WITH EAEU REGULATIONS
UK CA	COMPLIANCE WITH UK REGULATIONS		DO NOT DISPOSE OF WITH HOUSEHOLD WASTE

CONTROLS AND OPERATIONAL FEATURES

Front and Rear Panel

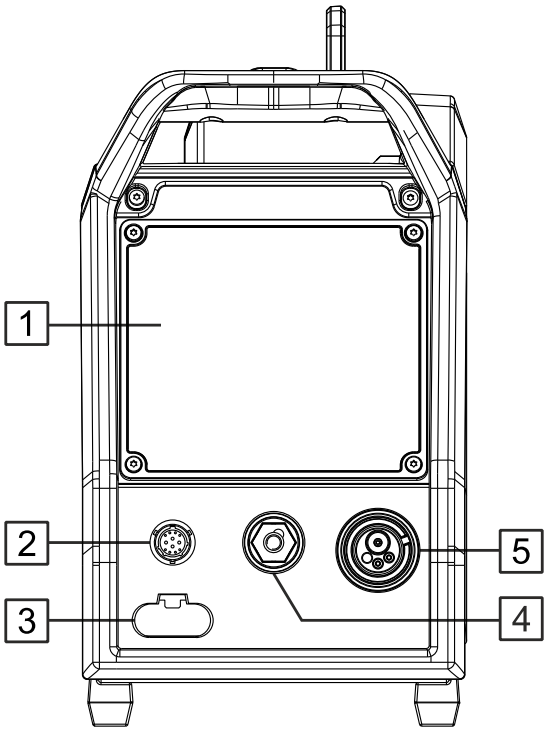

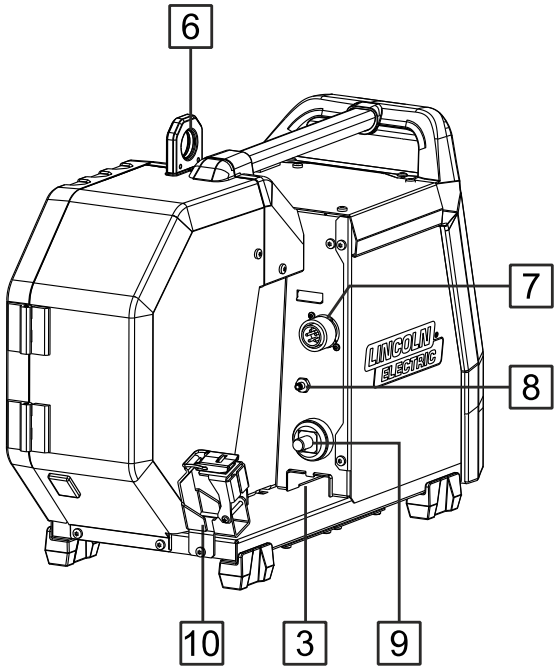

1. **U3 User Interface:** For more information, refer to USER INTERFACE on page C-1 section.
2. **Remote Control Socket:** For connecting a Remote Control (USER INTERFACE PENDANT BOX or TIG ADAPTOR). Refer to the ACCESSORIES AND OPTIONS on page E-1 section.
3. **Water Hose Guide.**
4. **Output Socket for SMAW and CAG welding:** Depending on the selected process:
   - SMAW: Connect the Electrode Holder with the welding lead to the output socket.
   - CAG: Connect the Gouging Torch to the output socket.
5. **EURO Socket:** For connecting a welding gun used in GMAW or FCAW processes.
6. **Lifting Eye:** For lifting and transporting the wire feeder.
7. **Control Socket:** A 5-pin socket for connecting the control cable. The **ArcLink®** protocol is used for communication between the power source and the wire feeder.
8. **Gas Connector:** For connecting the gas hose from the interconnection cable.

   Note: The machine allows the use of all suitable shielding gases at a maximum pressure of 5 bar.
9. **Current Socket:** For connecting current output power source cable.
10. **Strain Relief Holder:** Clamp for the interconnection cable harness.

Inside wire feeder (wire feeder cabinet)

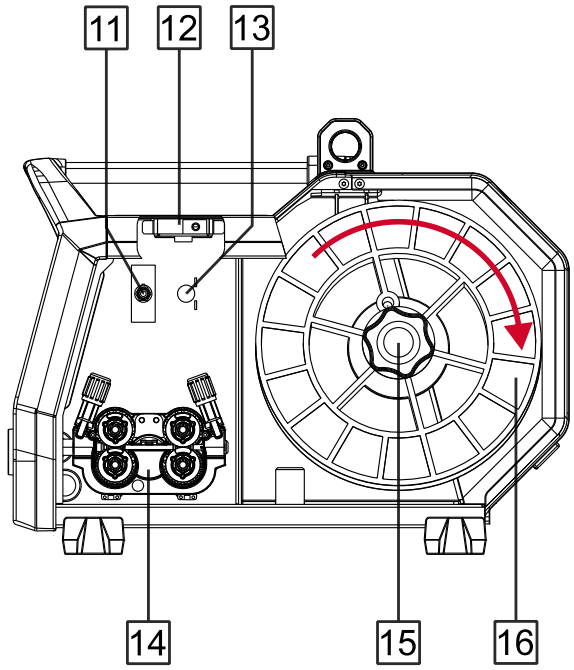

11. **Switch: Cold Inch / Gas Purge:** This switch allows wire feeding (wire test) and gas flow (gas test) without switching on the output voltage.
12. **Door Switch Indicator:** Indicates the status of the wire feeder door safety function. When enabled in the SETTINGS AND CONFIGURATION MENU on page C-21 , welding output is inhibited when the wire feeder door is open.
13. **Gas Flow Regulator Plug:** Gas Flow Regulator can be purchased separately. Refer to the ACCESSORIES AND OPTIONS on page E-1 section. More information about the GFR option is provided in GAS FLOW REGULATOR (GFR) on page B-11 section.
14. **Wire Drive:** Four-roll wire drive assembly.
15. **Wire Spool Support and Brake:** Designed for wire spools weighing up to 16 kg. The holder allows mounting plastic, steel, and fiber spools on a 51 mm spindle.
16. **Spool with Wire:** Not supplied as standard.

LOADING THE WIRE SPOOL

⚠ CAUTION

Turn the input power OFF at the welding power source before installing or changing the wire spool.

The holder can accommodate a wire spool with a **maximum weight of 16 kg** without an adapter. Plastic, steel, and fiber spools may be mounted on the 51 mm spindle.

Other spool types can be used with the appropriate adapter, available for separate purchase (refer to the ACCESSORIES AND OPTIONS on page E-1 section).

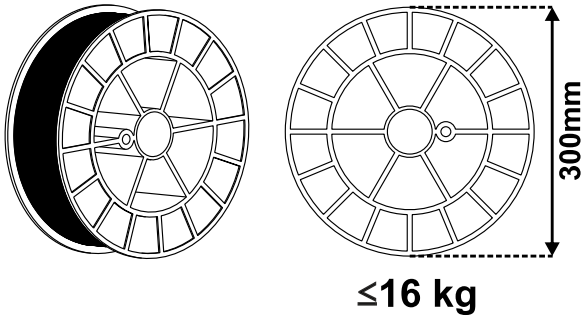

LOADING THE ELECTRODE WIRE

⚠ CAUTION

Sharp end of the wire can hurt.

To install wire spool and electrode wire:

- Turn the input power OFF.
- Open the wire feeder door and the spool wire case.
- Unscrew the locking nut from the spindle.
- Place the wire spool onto the spindle so that the wire feeds clockwise into the wire feeder.
- Ensure the spindle brake pin engages the locating hole in the wire spool.
- Reinstall and tighten the locking nut.
- Ensure that the correct drive rolls are installed according to the wire type and diameter.
- Release the pressure arms of the wire drive.
- Free the end of the wire and cut off the bent end making sure it has no burr.
- Rotate the wire spool clockwise and insert the wire into the inlet guide, feeding it toward the drive rolls.
- Push the wire manually through the guide tubes, over the drive rolls, and through the Euro Socket guide tube into the gun liner. The wire should feed smoothly without resistance.
- Close and secure the pressure arms.
- Adjust the pressure roll force properly.
- Ensure that the wire is properly aligned in the guides and drive rolls.

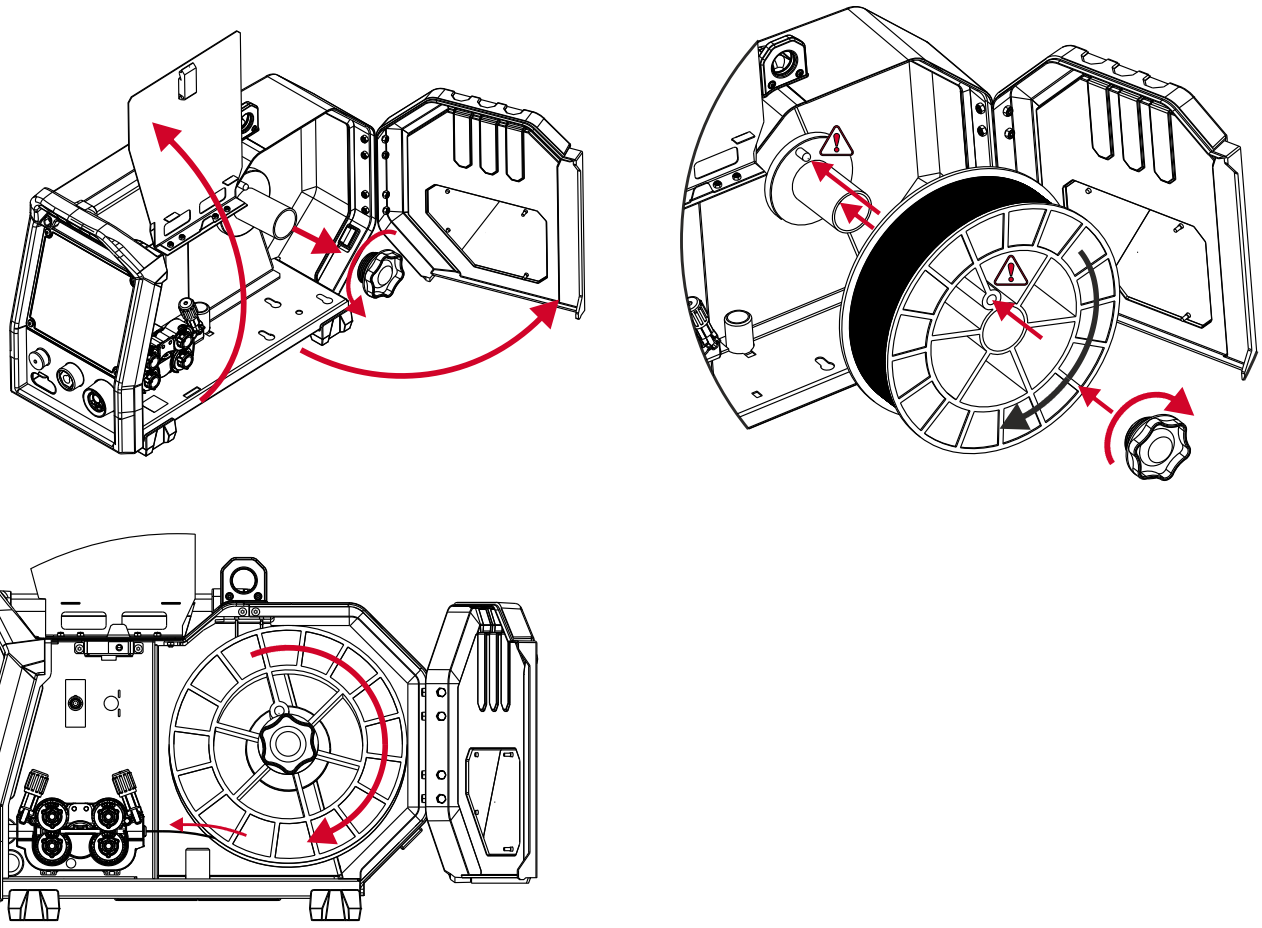

Note: Ensure that the selected drive rolls are suitable for the welding wire being used. Refer to the ACCESSORIES AND OPTIONS on page E-1 section.

ADJUSTING THE BRAKE TORQUE OF THE SLEEVE

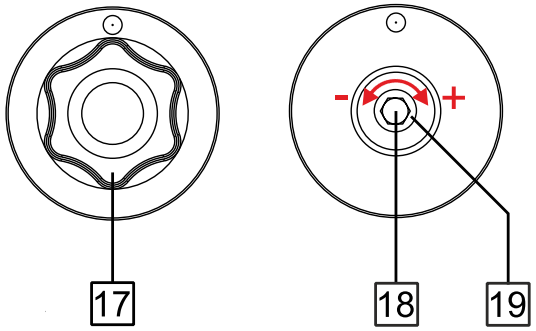

17.Locking Nut

18.Adjusting Screw M10: To adjust wire brake pressure

19.Pressing Spring

To prevent the welding wire from unrolling unintentionally, the sleeve is equipped with a brake. The adjustment is made by rotating the M10 screw located inside the sleeve frame, after loosening the brake locking nut.

Turning the M10 screw clockwise increases the spring tension and increases the brake torque.

Turning the M10 screw anticlockwise decreases the spring tension and decreases the brake torque.

After completing the adjustment, tighten the brake locking nut.

ADJUSTING PRESSURE ROLL FORCE

The pressure arm controls the amount of force the drive rolls exert on the wire.

Pressure force is adjusted by turning the adjustment nut:

- Clockwise to increase force
- Counterclockwise to decrease force

Proper adjustment of the pressure arm ensures optimal welding performance.

NOTE



If the roll pressure is too low, the roll will slip on the wire. If the roll pressure is too high, the wire may deform, causing feeding problems during welding.

To set the correct pressure:

1. Gradually decrease the pressure until the wire just begins to slip on the drive roll.
2. Then increase the force slightly by turning the adjustment nut one full turn.

INSERTING ELECTRODE WIRE INTO WELDING GUN

- Turn the welding machine OFF.
- Depending on the welding process, connect the proper welding gun to the euro socket. Ensure that the rated parameters of the gun and welding machine match.
- Depending on the type of gun, remove the nozzle and contact tip, or the protection cap and contact tip.
- Turn the welding machine ON.
- Hold the Cold Inch/Gas Purge Switch or press the gun trigger until the wire appears at the threaded end of the gun.
- When the Cold Inch Switch or gun trigger is released, the wire spool should not unwind.
- Adjust the wire spool brake if necessary.
- Turn the welding machine OFF.
- Install the proper contact tip.
- Depending on the welding process and the type of gun, install the nozzle (for GMAW process) or the protection cap (for FCAW process).

⚠ CAUTION



Keep eyes and hands away from the end of the gun while the wire is coming out of the threaded end.

CHANGING DRIVING ROLLS

Wire Drive Assembly (4-rolls system)

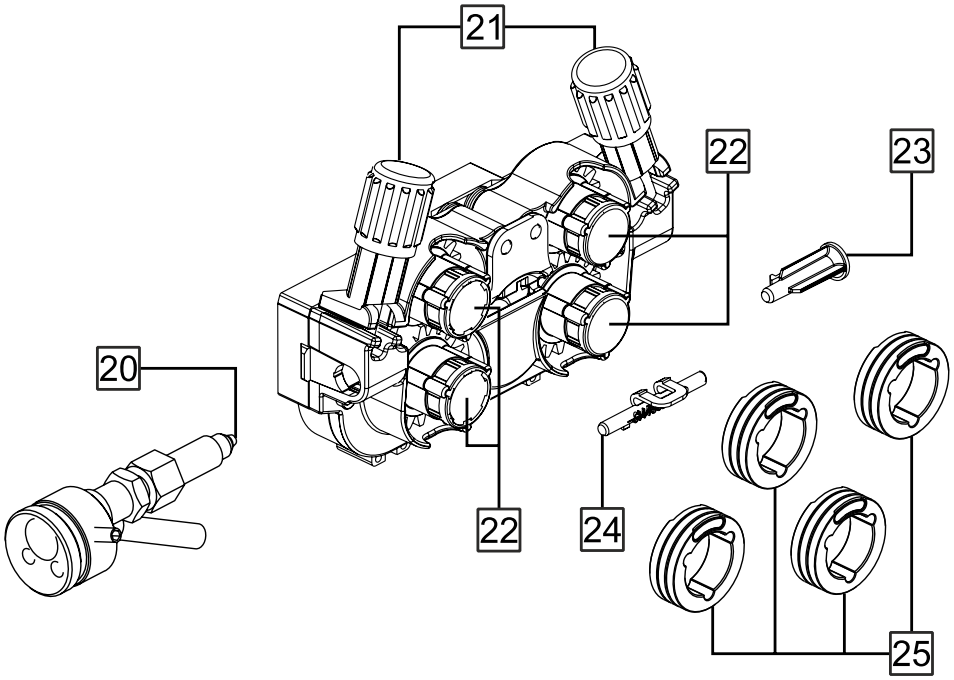

20. **Outlet Guide:** Guides the welding wire from the wire drive assembly into the welding gun connection (Euro Socket). Ensures smooth and accurate feeding of the wire into the gun liner and minimizes friction during operation.
21. **Wire Drive Tension Pressure Adjustment (pressure arms):** Used to secure the drive rolls in position. Adjusts the pressure applied by the pressure arm to the drive rolls.
22. **Quick-Change Drive Roll System:** Used to secure the drive rolls in position. Allows fast, tool-less replacement of drive rolls.
23. **Inlet Guide:** Guides the welding wire into the wire drive assembly. Ensures correct alignment of the wire before it enters the drive rolls.
24. **Intermediate Guide:** Provides additional guidance of the welding wire between the inlet guide and drive rolls. Maintains proper wire alignment within the wire drive system.
25. **Drive Rolls:** Grooved rolls that grip and drive the welding wire through the wire feeder. Different groove sizes are available to match various wire diameters and types.

Note: Components 20, 23, 24 and 25 may be purchased separately. Ensure that the selected components are compatible with the welding wire type being used. Refer to the ACCESSORIES AND OPTIONS on page E-1 section for available configurations.

⚠ WARNING

Turn the input power OFF before installing or changing drive rolls.

The wire feeder is equipped with drive rolls V1.0/V1.2 for steel wire. For other wire types and sizes, install the proper drive roll kit (refer to the ACCESSORIES AND OPTIONS on page E-1 section) and follow the instructions below:

- Turn the input power OFF.
- Open the wire feeder door and the wire spool case.
- Release the pressure arms.
- Rotate the Quick-Change Drive Roll System to unlock the drive rolls.
- Remove the installed drive rolls.
- Select the appropriate drive rolls according to the wire type and diameter.
- Install the new drive rolls, ensuring correct groove orientation.

  Note: Ensure that the selected drive rolls are suitable for the welding wire being used.

  Note: Ensure that the gun liner and contact tip match the selected wire size.
- Lock the drive rolls by rotating the Quick-Change Drive Roll System.
- Free the end of the wire and cut off the bent end, making sure it has no burr.

  Note: Sharp end of the wire can cause injury.
- Rotate the wire spool clockwise and insert the wire into the inlet guide, feeding it toward the drive rolls.
- Push the wire manually through the guide tubes, over the drive rolls, and through the Euro Socket guide tube into the gun liner. The wire should feed smoothly without resistance.
- Close and secure the pressure arms.
- Ensure that the welding wire is properly aligned in the guides and rolls.

GAS CONNECTION

⚠ WARNING



CYLINDER may explode if damaged.

Always secure the gas cylinder in an upright position using a wall rack or a purpose-made cylinder cart.

Keep the cylinder away from areas where it may be damaged, heated, or exposed to electrical circuits to prevent explosion or fire.

Keep the cylinder away from welding or other live electrical circuits.

Never lift the welder with the cylinder attached.

Never hang a welding torch on a shielding gas cylinder.

Never allow the welding electrode to touch the cylinder.

Accumulation of shielding gas may harm health or cause death. Use in a well-ventilated area to avoid gas buildup.

Close the cylinder valve when the equipment is not in use to avoid leaks.

Use only shielding gas cylinders, regulators, hoses, and fittings suitable for the application.

Only use shielding gas cylinders and accessories that are in good condition.

Follow the cylinder manufacturer's instructions and all applicable regulations.

⚠ CAUTION



The welding machine supports all suitable shielding gases up to a maximum pressure of 5.0 bar.

Ensure that the shielding gas is suitable for the selected welding process.

Gas connection procedure

- Switch OFF input power at the welding power source.
- Install a proper gas flow regulator on the gas cylinder.
- Connect the gas hose to the regulator and secure it with a hose clamp.
- Connect the other end of the gas hose to the Gas Connector on the rear panel of the power source or directly to the quick connector located on the rear panel of the wire feeder. Refer to the power source instruction manual for details.
- Connect the wire feeder and power source using the dedicated interconnection cable (refer to ACCESSORIES AND OPTIONS on page E-1 section).
- Switch ON input power at the welding power source.
- Open the gas cylinder valve.
- Adjust the shielding gas flow using the gas regulator.
- Check gas flow using the Gas Purge Switch.

GAS FLOW REGULATOR (GFR)

Note: The gas flow regulator is not included in the standard equipment. It is available as an optional accessory. Refer to the ACCESSORIES AND OPTIONS on page E-1 section.

Note: The gas flow regulator must be installed according to the instructions supplied with the kit.

The Gas Flow Regulator (GFR) is a control component integrated with the wire feeder, designed to adjust and stabilize the shielding gas flow supplied to the welding torch.

When installed, the GFR enables:

- Adjustment of shielding gas flow directly on the wire feeder.
- Improved control of shielding conditions.
- Reduction of gas consumption when properly set.

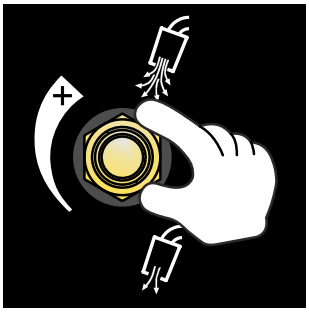

The gas flow is manually adjusted using the control knob located on the unit.

- Clockwise rotation: Increase gas flow.
- Counterclockwise rotation: Decrease gas flow.

⚠ WARNING

Do not perform welding without active shielding gas flow.

Stop operation immediately if a gas leak is detected.

Do not exceed recommended gas flow values.

⚠ CAUTION

Adjust gas flow only while gas is flowing.

Do not force the regulator knob.

Keep the regulator clean and free from contamination.

Use only shielding gas specified for the welding process.

NOTE

Proper gas flow setting directly affects weld quality and gas consumption.

Set the flow rate according to the welding procedure and application requirements.

PENDANT BOX CONNECTION

Note: The pendant box is not included in the standard equipment. It is available as an optional accessory. Refer to the ACCESSORIES AND OPTIONS on page E-1 section.

Note: The pendant box must be installed according to the instructions supplied with the pendant box.

After connection, the pendant box takes over the functions of the User Interface.

To connect the pendant box:

1. Assemble the pendant box according to the instructions supplied with the accessory.
2. Locate the 12-pin Remote Control Socket on the front panel of the wire feeder.
3. Connect the pendant box to the Remote Control Socket (12-pin).

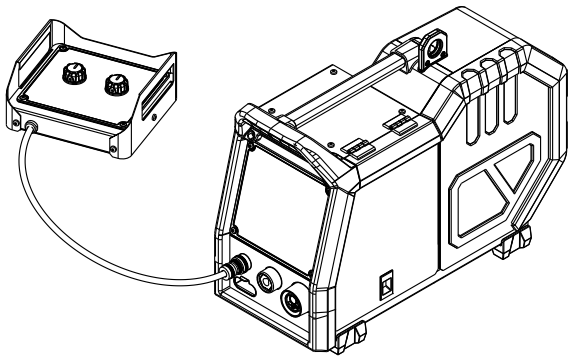

USER INTERFACE

OVERVIEW

This section describes the control elements, indicators, symbols, and operating logic of the **User Interface**. The location and function of each control and indicator are shown and described below.

LOCATION OF THE USER INTERFACE

The User Interface is mounted on the front panel of the wire feeder. It is positioned to allow convenient access during setup and welding operation.

INTRODUCTION - U3 USER INTERFACE

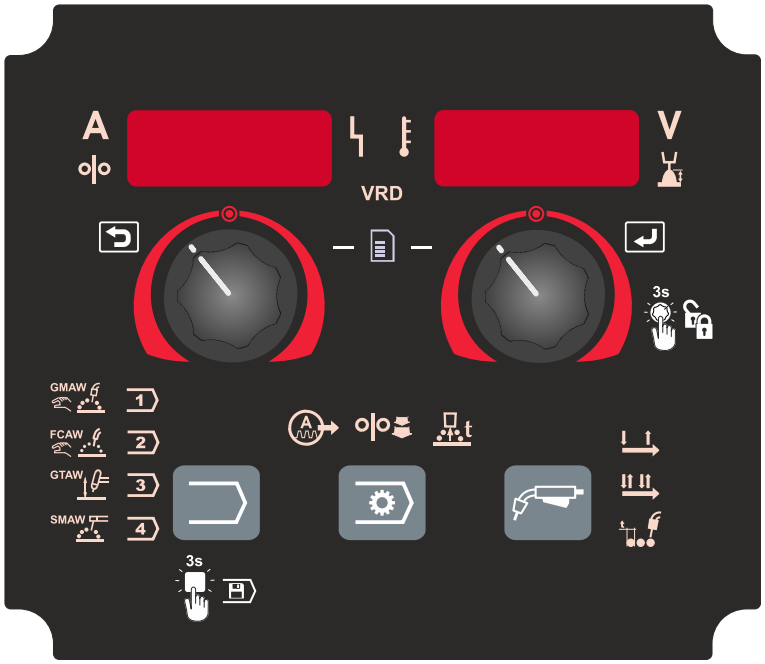

U3 **User Interface** provides access to welding parameters, operating modes, and machine settings. The interface includes two control knobs with integrated push-button functionality and three additional buttons. Backlit icons and LED displays indicate parameter values and machine status.

CONTROL KNOBS

The User Interface is equipped with two rotary control knobs. The left and right control knobs with integrated push-button functionality are used to adjust values shown on the corresponding displays. The controls also allow access to functions, confirmation of selections, and navigation within menus.

FUNCTION BUTTONS

Three function buttons are located on the panel. The function buttons provide access to specific functions, parameter groups, or operating modes, depending on the selected welding process and system configuration.

DISPLAYS

The User Interface features digital LED displays used to show welding parameters and system information. Displayed values depend on the selected welding process and current operating state.

U3 SYMBOLOGY

Table 1 : U3 symbols and meaning

GRAPHIC SYMBOLS THAT APPEAR ON THIS INTERFACE OR IN THIS MANUAL			
	WELD MODE		WELDING PARAMETERS
	GMAW (NON-SYNERGIC) PROCESS	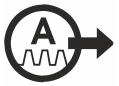	ARC CONTROL
	FCAW-GS PROCESS		RUN-IN WFS
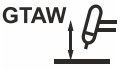	GTAW PROCESS	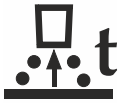	BURNBACK TIME
	SMAW PROCESS		
	MEMORY SLOT 1		TRIGGER MODE
	MEMORY SLOT 2	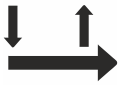	2-STEP TORCH TRIGGER MODE
	MEMORY SLOT 3	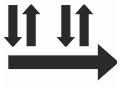	4-STEP TORCH TRIGGER MODE
	MEMORY SLOT 4	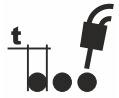	SPOT WELDING SETTINGS
	AMPERE	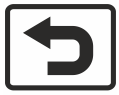	RETURN (CANCEL / BACK)
	WFS (WIRE FEED SPEED)		SETTINGS AND CONFIGURATION MENU
	VOLTS		CONFIRMATION OF SELECTION

GRAPHIC SYMBOLS THAT APPEAR ON THIS INTERFACE OR IN THIS MANUAL			
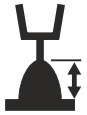	TRIM		UNLOCK / LOCK
	THERMAL OVERLOAD INDICATOR		STORE TO USER MEMORY
	MACHINE STATUS OF WORK		
VRD	VRD (VOLTAGE REDUCTION DEVICE)		

TERMINOLOGY

The following terms are used to describe welding functions and memory features of the U3 User Interface.

WELDING PROCESS

A welding method, such as GMAW, FCAW, SMAW, GTAW.

WELD MODE

A predefined welding configuration for a specific welding process without stored welding parameters. Weld modes are defined by electrode or wire type, wire size, and shielding gas.

FIXED WELD MODE

A factory-defined, non-synergic Weld Mode that cannot be modified by the operator.

JOB

A Job combines a Weld Mode with user-defined welding parameters. Jobs can be stored in and recalled from User Memory.

USER MEMORY

The user memory provides four memory slots for storing and recalling jobs. Each Memory Slot stores one Job.

U3 USER INTERFACE CONTROLS AND INDICATORS

This section describes the control elements and indicators of the U3 **User Interface**.

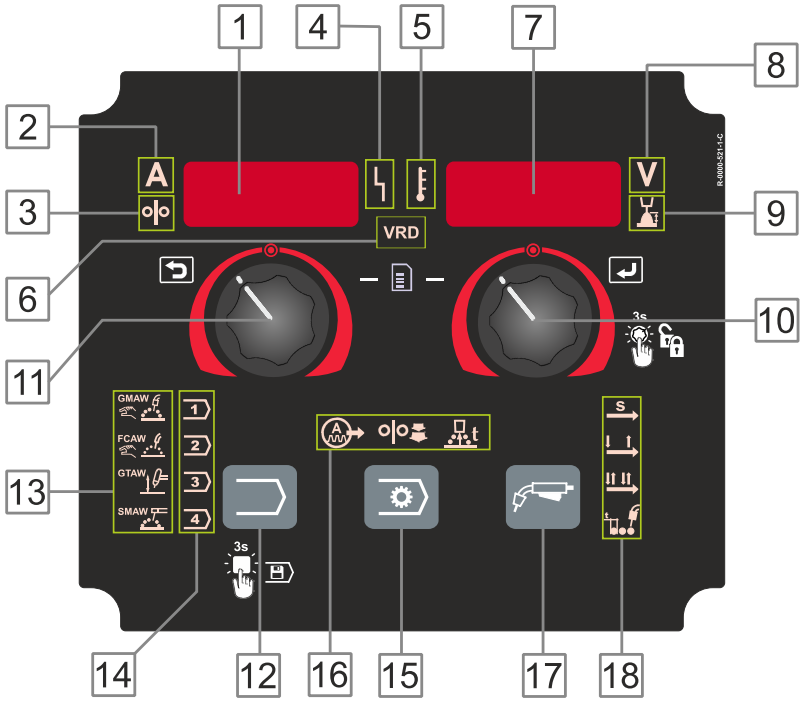

1. **Left Display:** Displays wire feed speed or welding current. During welding, the actual welding current value is displayed.
2. **Welding Current Indicator:** Indicates that the value shown on the Left Display represents welding current in amperes.
3. **WFS Indicator:** Indicates that wire feed speed is displayed on the Left Display.
4. **Machine Status Indicator:** Indicates the current operating status of the welding system and system communication. The indicator uses dual-color LED signals (green/red) to provide information about operating conditions and fault states. Normal operation is indicated by a steady green light. For detailed status indications and fault conditions, refer to the TROUBLESHOOTING GUIDE on page G-1 section.
5. **Overheated Indicator:** Indicates that the welding machine has overheated.
6. **VRD Indicator:** Shows whether the Voltage Reduction Device (VRD) is active. Available only on VRD machine versions.
7. **Right Display:** Depending on the selected Weld Mode, displays welding voltage in volts or the Trim value. During welding, the actual welding voltage value is displayed.
8. **Volts Indicator:** Indicates that the value shown on the Right Display is in volts. During welding, the indicator blinks and the measured voltage is displayed.
9. **Trim Indicator:** Indicates that the value shown on the Right Display represents the Arc Length Trim.
10. **Right Control with Active Button:** Enables adjustment of values shown on the Right Display. Also allows access to various functions and confirms the selected value.

11.Left Control with Active Button: Enables adjustment of values shown on the Left Display. Also cancels a selection or returns to the previous menu.

12.Weld Mode Selection Button: Enables the following functions:

- Changing the welding process.
- Checking the active Weld Mode.
- Storing user memories.

13.Fixed Weld Mode Indicators: Indicate the selected non-synergic Weld Mode.

14.Job Indicators: Indicate the selected user memory slot and the selected Job stored in user memory.

15.Welding Parameters Button: Enables selection of welding parameters.

16.Welding Parameters Indicators: Indicate the currently active welding parameter.

17.Trigger Operating Mode Button: Allows selection of the Trigger Operating Mode.

18.Trigger Operating Mode Indicators: Indicate the selected Trigger Operating Mode.

FIXED WELD MODES

Fixed Weld Modes are predefined by the manufacturer and cannot be modified by the operator.

Each fixed Weld Mode defines a welding process.

Table 2 : Fixed Weld Modes

Symbol	Process	Weld Mode Number
		SPEEDTEC® 400S/500S
	GMAW (non-synergic)	5
	FCAW-GS	7
	GTAW	3
	SMAW	1

NOTE



The illuminated symbol indicates the active Weld Mode.

The list of available Weld Modes depends on the power source.

Weld Modes not supported by the power source are not indicated.

JOBS

A Job combines a weld mode with stored welding parameters.

- Only Jobs can be stored in and recalled from User Memory.
- Up to four Jobs can be stored in User Memory.
- To use a Weld Mode other than the Fixed Weld Mode, store it as a Job in User Memory.

Table 3 :Default settings for SPEEDTEC® 400S/500S

Memory Slot Symbol	Process	Settings	Weld Mode Number
	GMAW in synergic mode CV	ArMix 1.0 WFS: 6 m/min	36
	GMAW-P in synergic mode	ArMix 1.0 WFS: 6 m/min	40
	GMAW in synergic mode CV	ArMix 1.2 WFS: 6 m/min	49
	GMAW-P in synergic mode	ArMix 1.2 WFS: 6 m/min	53

NOTE



The illuminated symbol indicates the active Job.

Each memory slot stores one Job.

USER MEMORY

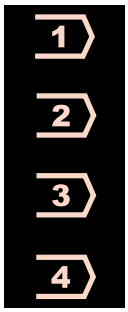

The user memory provides four memory slots for storing and recalling jobs. Each Memory Slot stores one Job.

Note: Up to four Jobs can be stored in the User Memory.

Note: The illuminated symbol indicates the active Memory Slot.

NOTE

Only Jobs (Weld Modes combined with their welding parameters) can be stored in User Memory.

The list of available Weld Modes depends on the power source.

WELDING PARAMETERS MENU

ATTENTION

Availability of the parameters in the Welding Parameters Menu depends on the selected Weld Mode.

Access to the menu is not available during welding, or if there is a fault (ArcLink® Status Indicator is not solid green).

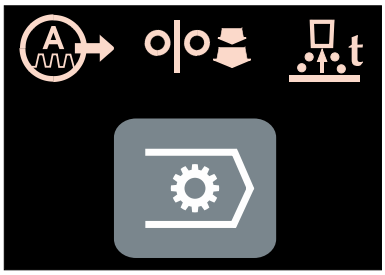

Welding Parameters Menu allows access to the arc parameters as well as start and end process parameters, includes:

- Arc Control
- Run-in WFS
- Burnback Time

Note: If a Weld Mode does not support a parameter, it is skipped and the Welding Parameters Indicator is not illuminated.

Arc Controls

Parameter	Definition
	**Pinch** - Controls arc characteristics during short-circuit welding. Increasing the Pinch value produces a crisper arc and may increase spatter. Decreasing the Pinch value produces a softer arc with reduced spatter. • Adjustment range: -10.0 to +10.0 • Default setting: 0.0

Parameter	Definition
	**Frequency –** Affects arc width, shape, and heat input to the weld. Available in GTAW Weld Mode only. For pulse welding, adjusts arc focus and stability. Increasing the Frequency value produces a tighter, stiffer arc, suitable for high-speed sheet metal welding. • Adjustment range: 0 to 100 Hz • Default setting: 0 = DC (-), pulse function disabled 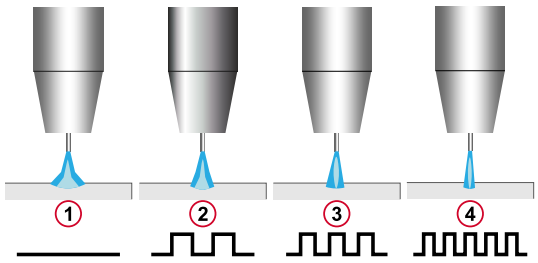 1 0 – DC (–), pulse function disabled. 2 0.01 to 50 Hz – Low frequency, wider arc. 3 50 Hz – Medium frequency and arc width. 4 50 to 100 Hz – High frequency, tight and focused arc.
	**Background Current** - Percentage value of nominal welding current. Adjusts the overall heat input to the weld and influences the shape of the back bead. **Note:** Adjust range depends on the power source.

Parameter	Definition
	**UltimArc**™ - Available in GMAW-PULSE Weld Modes only. Adjusts the welding arc focus and shape. Suitable for high-speed sheet metal welding. • Adjustment range: -10 to +10 • Default setting: 0.0 Increasing the value produces a tighter, stiffer arc. Lower values produce a wider, softer arc. 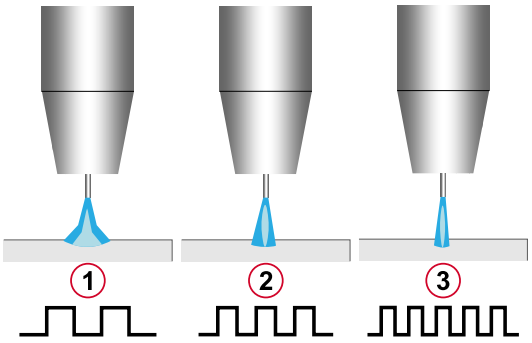 1 -10.0 - Wide, soft arc 2 0.0 - Nominal Ultimarc setting point 3 +10.0 - Tight, focused arc
	**ARC FORCE** - Temporarily increases output current to prevent electrode sticking and improve arc stability. Lower values produce a softer arc with less short-circuit current. Higher values produce a more forceful arc with increased short-circuit current and may increase spatter. • Adjust range: -10 to +10 • Default setting: 0.0
	**HOT START** - Temporarily increases the nominal current during arc initiation to improve arc starting when using electrodes. • Regulation range: from 0 to +10.0 • Default settings: +5.0

Process start and end parameters

Parameter	Definition
	**Run-in WFS –** sets the wire feed speed from the time the torch trigger is pressed until an arc is established. • Regulation range: from 1.49 m/min (59 in/min) to 3.81 m/min (150 in/min) • Default settings: AUTO

Parameter	Definition
	**Burnback Time –** amount of time that the welding is continued after the wire stops feeding. It prevents the wire from sticking in the puddle and prepares the end of the wire for the next arc ignition. • Regulation range: from OFF to 0.25 seconds • Default settings: AUTO

To set the welding parameters

1. Select the Weld Mode (refer to SELECTING THE WELD MODE on page C-16 section).

2. Press the Welding Parameters Button until the Indicator illuminates the desired parameter.

3. Parameter Name appears on the Left Display, and the current value is shown on the Right Display.



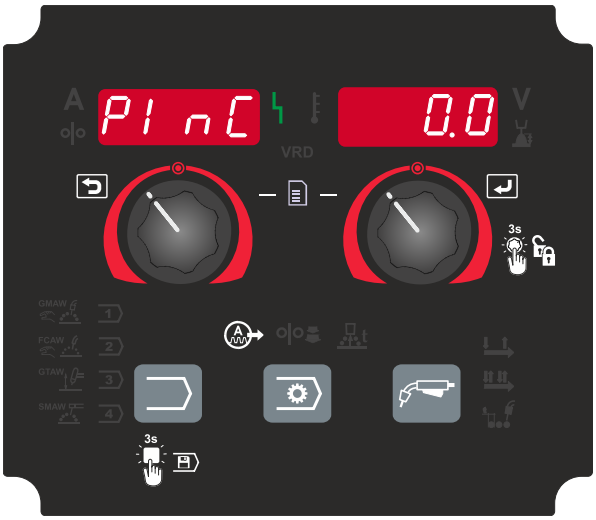

4 Adjust the parameter value using the Right Control. The selected value is automatically saved.

5 Press the Welding Parameters Button again to move to the next parameter.

6 Repeat the procedure as required.



TRIGGER OPERATING MENU

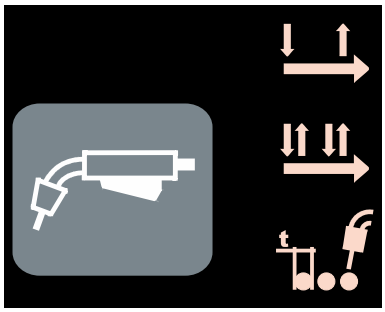

The Trigger Operating Menu allows changing the function of the trigger or set the Spot Welding Parameters.

Trigger Operating Mode menu includes

Parameter	Definition
	**2-Step Trigger Mode** - The 2-step trigger operation turns welding on and off in direct response to the trigger. The welding process starts when the torch trigger is pressed. **Note:** Adjust range depends on the power source.
	**4-Step Trigger Mode** - 4-step mode allows welding to continue after the torch trigger is released. To stop welding, press the torch trigger again. The 4-step mode makes it easier to perform long welds. **Note:**4-step mode is not available for spot welding.
	**Spot Welding Settings** – Sets the total welding time even if the torch trigger remains pressed. This function does not work in 4-step trigger mode. • Regulation range: 0 seconds (OFF) to 120 seconds • Default setting: OFF **Note:** This function does not work in 4-step trigger mode. **Note:** For Spot Welding set the Spot Time value by the Right Control. The set value is shown on the Right Display.

To set the Trigger Operating Mode:

1. Select the Weld Mode (refer to SELECTING THE WELD MODE on page C-16 section).
2. Set the welding parameters (refer to WELDING PARAMETERS MENU on page C-8 section).

3 Press the Trigger Operating Mode Button.



4 The available Trigger Operating Mode Indicator is illuminated on the User Interface. `MOdE` appears on the Right Display, and the Trigger Mode name appears on the Left Display.

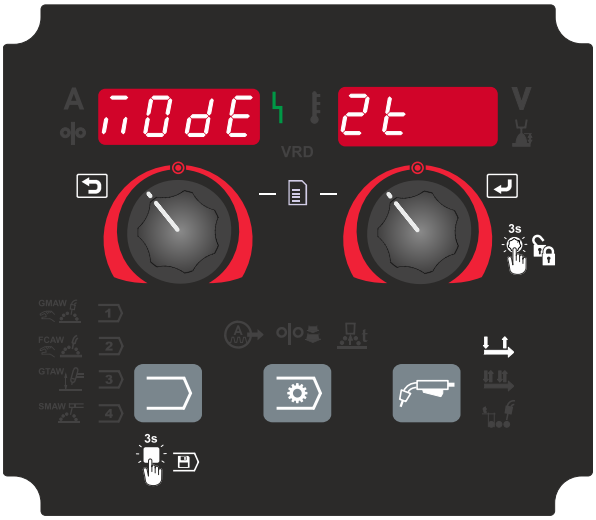

5 Press the Trigger Operating Mode Button again.



6 Repeat the procedure until the desired Trigger Mode is illuminated.

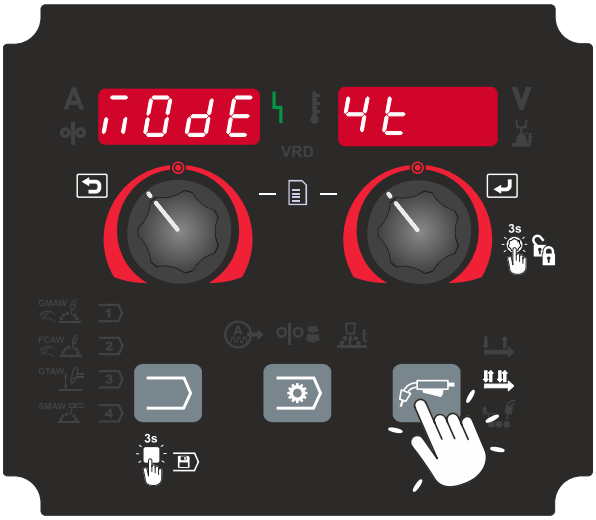

NOTE

The available Trigger Operating Modes depend on the selected Weld Mode.

Trigger Operating Modes not supported by the selected Weld Mode are not available.

SELECTING THE WELD MODE

The Weld Mode is selected from the SETTINGS AND CONFIGURATION MENU on page C-21 .

To select the Weld Mode :

1. Press the Left Control and the Right Control simultaneously.

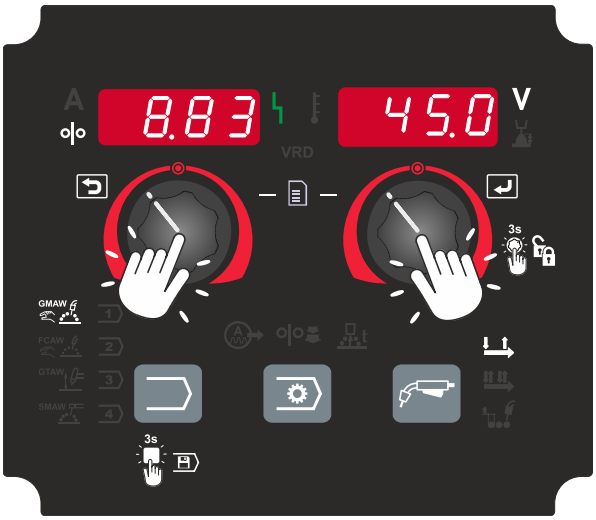

2. `Pr` flashes on the Left Display, and the Weld Mode number appears on the right display. Press the Right Control to enter the Weld Mode selection menu.

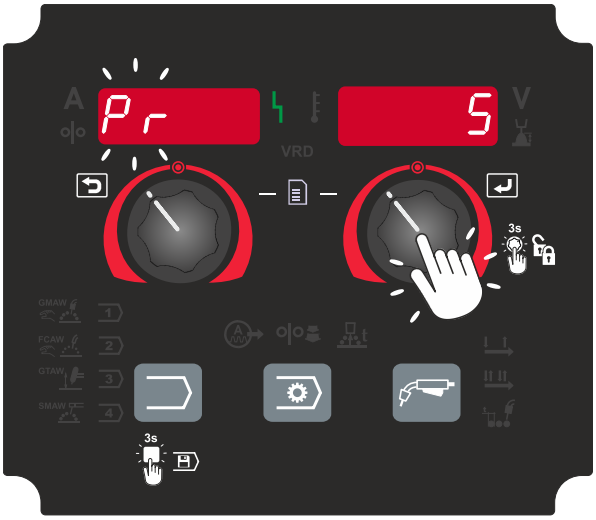

3 The Weld Mode number flashes on the Right Display. Turn the Right Control to select the desired Weld Mode number.

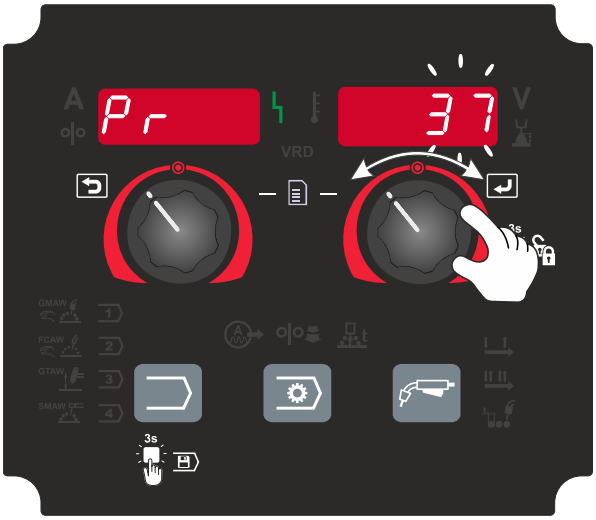

4 Press the Right Control to confirm the selection.

SAVING JOB TO USER MEMORY

To save the Job to user memory:

1 Select the Weld Mode (refer to SELECTING THE WELD MODE on page C-16 section).

2 Set the welding parameters (refer to WELDING PARAMETERS MENU on page C-8 section).

3 Press and hold the Weld Mode Selection Button for 3 seconds to enter the memory slot selection menu.

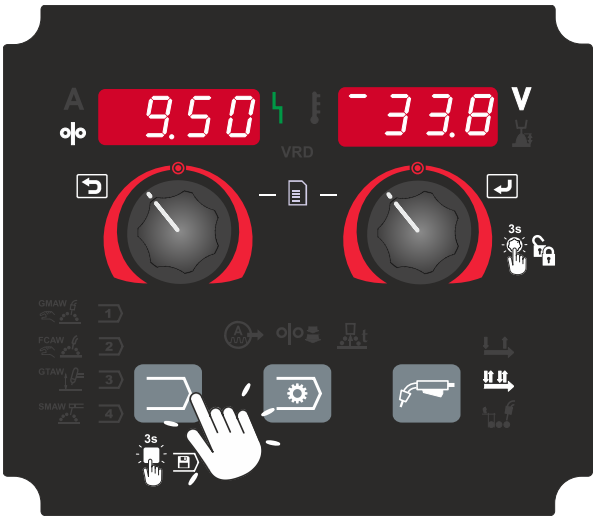

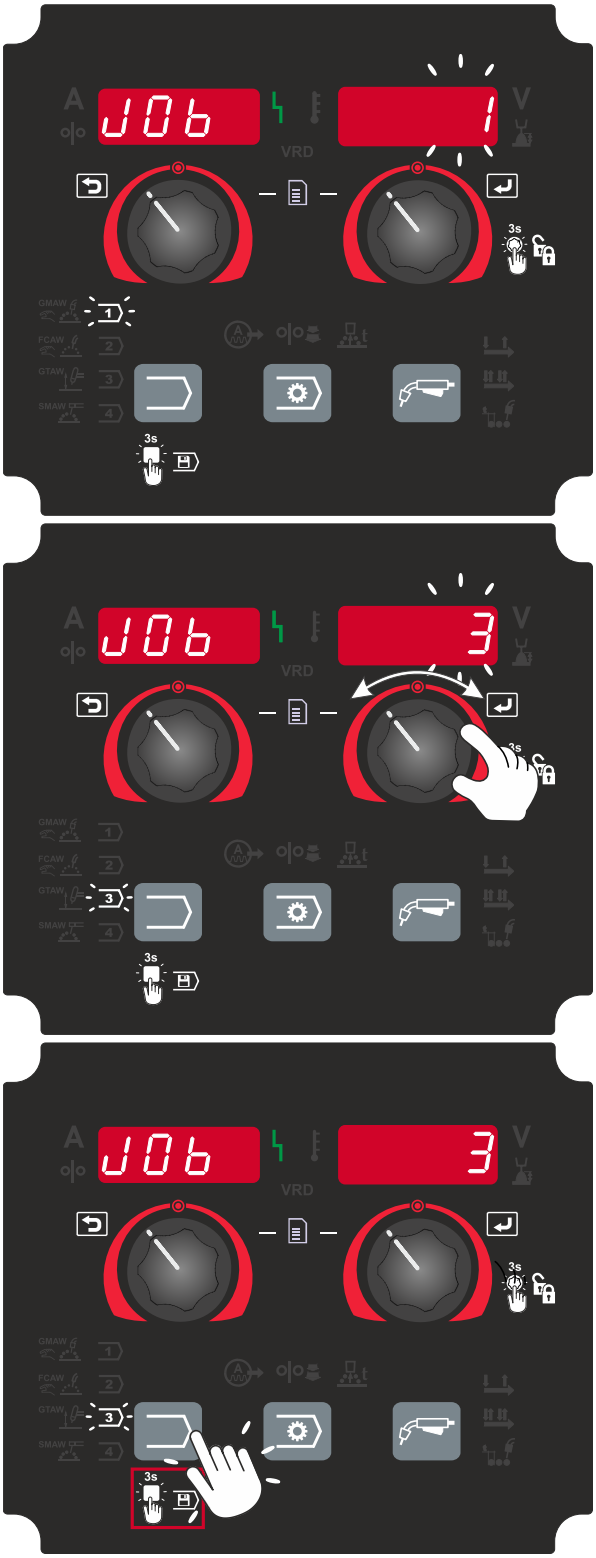

4 Memory slot selection menu is active. JOb appears on the Left Display. The memory slot number flashes on the Right Display and the memory slot symbol is illuminated on the User Interface panel.

5 Turn the Right Control to select the desired memory slot number (from 1 to 4).

6 Press and hold the Weld Mode Selection Button for 3 seconds to save Job.

7 The Job (Weld Mode and its welding parameters) is stored to the selected memory slot.

CHANGING THE WELD MODE OR JOB

The U3 **User Interface** allows quick recall of up to eight welding selections:

- Factory-defined Fixed Weld Modes.
- User-defined Jobs stored in User Memory.

Changing the Fixed Weld Mode or Job:

1. Press the Weld Mode Selection Button.



2. The Fixed Weld Mode or Number of Slot Memory symbol is illuminated on the panel. `Pr` or `JOb` appears on the Left Display, and the current Weld Mode or number of Slot Memory is shown on the Right Display.

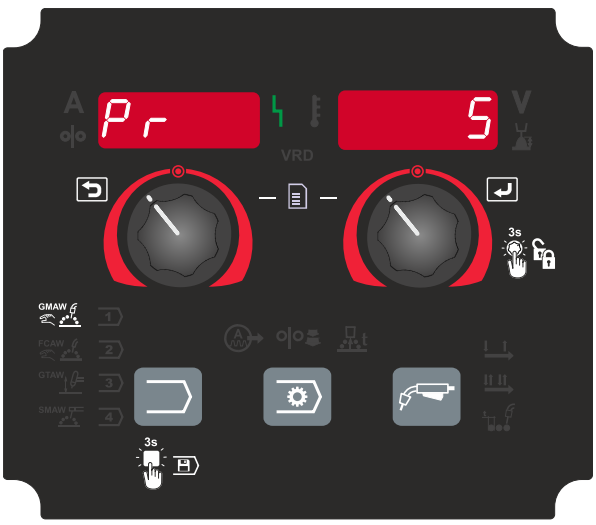

3 Press the Weld Mode Selection Button again. The illuminated indicator moves to the next in the sequence.



4 Release the button when the desired Fixed Weld Mode or Number of Slot Memory is illuminated.

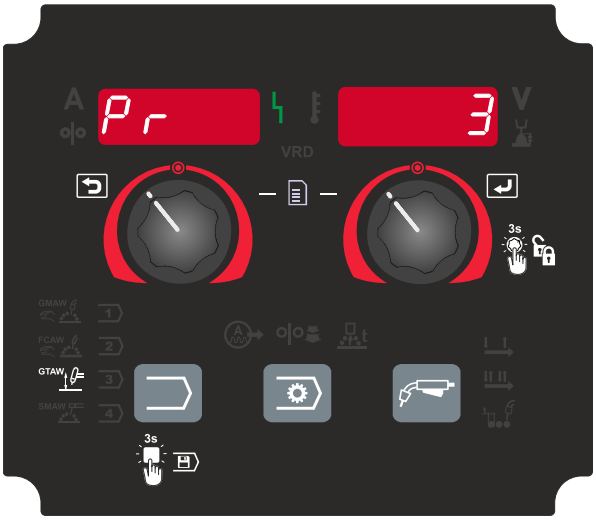

NOTE

After restart, the device recalls the last selected Fixed Weld Mode or Job.

SETTINGS AND CONFIGURATION MENU

This section describes the Settings and Configuration Menu of the User Interface. The menu allows the user to adjust welding-related settings and configure device-specific parameters.

Guide

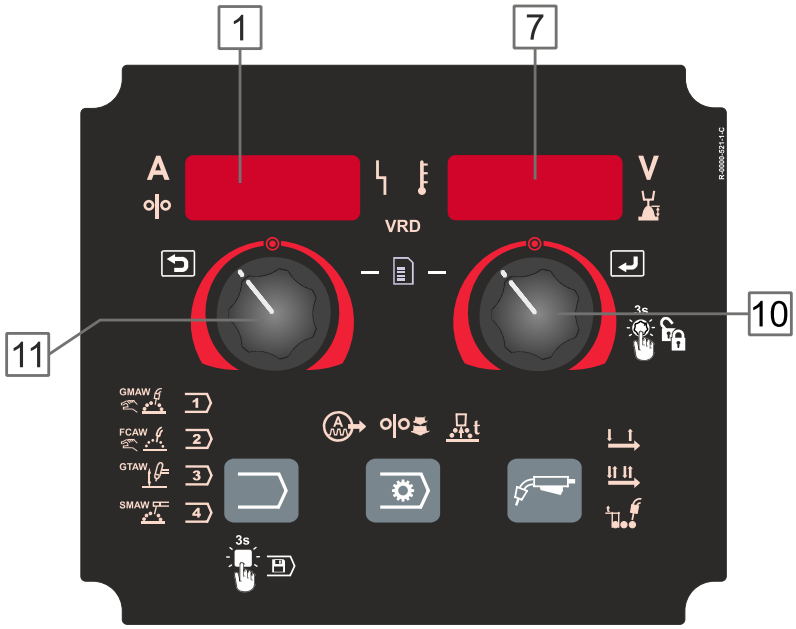

Menu Interface Behavior:

1. **Left Display** – shows the parameter name
7. **Right Display** – shows the parameter value

10.Right Control – used for entering edit mode, changing parameter values, and confirming selections
11.Left Control – used for parameter selection, cancellation, or returning to the previous level

The Settings and Configuration Menu operates in two modes:

- Parameter Selection Mode:
  - The parameter name on the Left Display flashes.
  - Turn the Left Control to scroll through available parameters.
- Parameter Change Value Mode:
  - Press the Right Control to enter this mode.
  - The parameter value on the Right Display flashes.
  - Turn the Right Control to change the value.

Saving Changes and Exiting the Menu:

- To save changes and exit, press the Right Control.
- To exit without saving, press the Left Control.
- If no operation is performed for 1 minute, the menu exits automatically without saving.

Accessing the Settings and Configuration Menu:

1. Press the Left Control and the Right Control simultaneously.

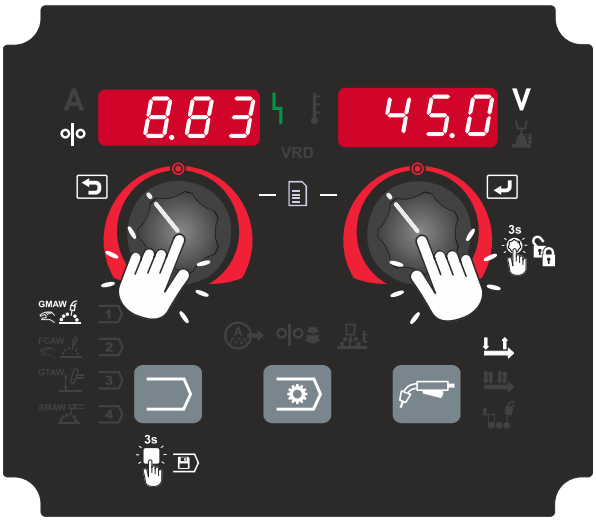

2. Parameter Name flashes on the Left Display, and the value appears on the Right Display. Parameter Selection Mode is active.

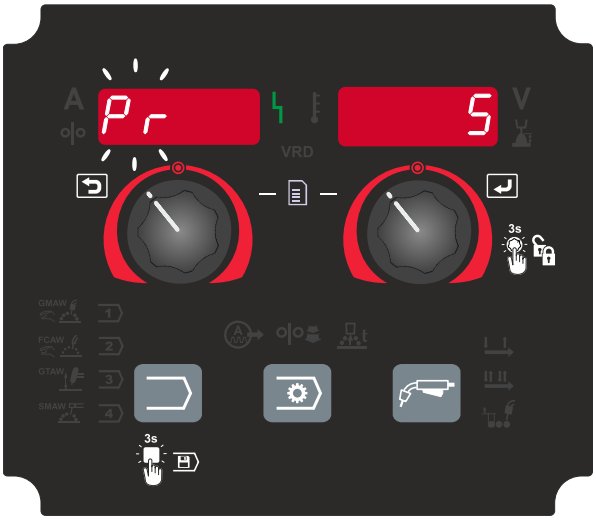

The Settings and Configuration Menu has two levels

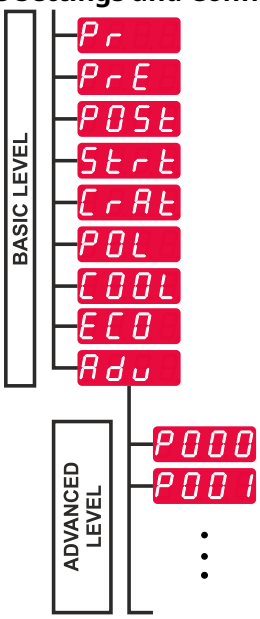

- **Basic Level** – parameters related to welding operation. The Basic Level includes the parameters described in The default settings of Basic Menu on page C-23 .

  Note: The available parameters depend on the selected Weld Mode.
- **Advanced Level** – device configuration parameters. The Advanced Level includes the parameters described in The default settings of Advanced Menu (Device Configuration Menu) on page C-27 .

The default settings of Basic Menu

Parameter	Definition
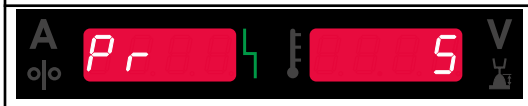	**Weld Mode (Program, `Pr`)** - the Right Display shows the actual Weld Mode number selected by the user. **Note:** The list of available Weld Modes depends on the power source.
	**Preflow Time –** the time that shielding gas flows after the torch trigger was pressed before wire feeding. • Default setting: `AUtO`. • Available settings: `AUtO` or `OFF` (0) to 25 seconds.
	**Postflow Time –** Sets the time during which shielding gas continues to flow after arc termination. • Default setting: `AUtO`. • Adjust time range: Available settings: `AUtO` or `OFF` (0) to 25 seconds.

Parameter	Definition



	Start Procedure – controls the WFS (or value in ampere units) and Volts (or Trim) for a specified time at the beginning of welding. During the Start Time, the machine will ramp up or down from the Start Procedure to the preset welding parameter.
	• Default setting: `AUtO`.
	• Available settings: `AUtO` or `OFF` (0) to 10 seconds.
	
	Start parameters:
	• Start Time
	• Wire Feed Speed or welding current.
	• Voltage or Trim value.
	Note: The Start parameters depend on the selected Weld Mode.
	
	To set the Start Procedure:
	• Press the Right Control.
	• `SEC` appears on the Left Display.
	• The Start Time value flashes on the Right Display.
	• Turn the Right Control to adjust the Start Time:
	  • turn to the right to increase the time (0 to 10 seconds),
	  • turn to the left to select `AUtO`.
	• Press the Right Control to confirm the Start Time.
	• The Wire Feed Speed (or welding current) appears on the Left Display, and the Voltage or Trim value appears on the Right Display.
	• Turn the Left Control to adjust the Wire Feed Speed or welding current.
	• Turn the Right Control to adjust the Voltage or Trim value.
	• Press the Right Control to confirm the settings.

Parameter	Definition



	Crater Procedure - controls the WFS (or value in ampere units) and Volts (or Trim) for a specified time at the end of the welding after the trigger was released. During the crater time, the machine will ramp up or down from the Weld Procedure to the Crater Procedure.
	• Default setting: `OFF`.
	• Adjust time range: Available settings: `AUtO` or `OFF` (0) to 10 seconds.
	
	Crater parameters:
	• Crater Time
	• Wire Feed Speed or welding current.
	• Voltage or Trim value.
	Note: The Crater parameters depend on the selected Weld Mode.
	To set the Crater Procedure:
	• Press the Right Control.
	• "SEC" appears on the Left Display.
	• The Crater Time value flashes on the Right Display.
	• Turn the Right Control to adjust the Crater Time:
	  • turn to the right to increase the time (0 to 10 seconds),
	  • turn to the left to select `AUtO`.
	• Press the Right Control to confirm the Crater Time.
	• The Wire Feed Speed (or welding current) appears on the Left Display, and the Voltage or Trim value appears on the Right Display.
	• Turn the Left Control to adjust the Wire Feed Speed or welding current.
	• Turn the Right Control to adjust the Voltage or Trim value.
	• Press the Right Control to confirm the settings.

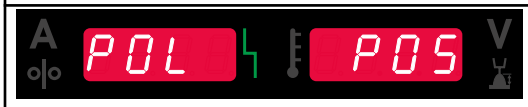	**Polarity** – Configures the work and electrode sense leads. • Default setting: `POS` (Positive) – for most GMAW procedures (Electrode Positive). • `nEG` (Negative) – for most GTAW and selected self-shielded processes (Electrode Negative).
	**Cooler** – This option is available only when a cooler is connected to the system. The cooler function provides the following operating modes: • `AUTO` (default) – The cooler operates automatically based on system requirements. • `OFF` – The cooler is switched off. • `FILL` – Initiates the coolant filling procedure. Refer to Section FILLING THE RESERVOIR AND WATER LINES on page C-32 for additional information.

Parameter	Definition

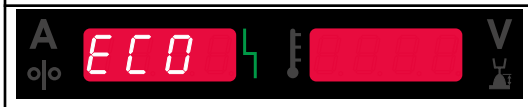


	Green Mode – Is a power management feature that enables the welding equipment to transition to a low power state, reducing energy consumption when the unit is not in use.
	
	Display Configuration Settings:
	
	• `StbY` (Standby) – Defines the time before the system enters standby (low power) mode.
	• `SHUt` (Shutdown) – Defines the time before the system automatically powers off.
	
	Standby & Shutdown Modes
	
	The welding power source is equipped with Standby and Shutdown functions to reduce energy consumption during idle periods.
	
	• Standby mode: reduces power consumption to below 50 W.
	• Shutdown mode provides maximum energy savings but requires a restart to resume operation.
	• Default setting (both): `OFF`
	
	Setting Standby or Shutdown Time:
	
	• Press the Right Control knob to access the desired menu (Standby or Shutdown).
	• Rotate the Right Control to select the required delay time:
	  • Adjustable range: 1–300 minutes.
	  • Select `OFF` to disable the function.
	• Press the Right Control to confirm the setting.
	
	Standby Mode
	
	• The machine automatically enters Standby after the preset idle time.
	• Normal operation is restored when:
	  • Any user interface control is activated, or
	  • The welding trigger is pressed.
	
	Shutdown Mode
	
	• The system displays a notification prior to entering Shutdown mode.
	• A 15-second countdown is initiated before shutdown.
	• To resume operation, the machine must be:
	  • Switched OFF, then
	  • Switched ON again.
	
	Note: In both Standby and Shutdown modes, the displays are disabled.
	
	Note: Standby mode allows faster return to the welding operation without power cycling.

Parameter	Definition
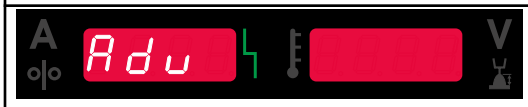	**Advanced Menu** – Device Configuration Menu. The Advanced Menu provides access to device configuration settings. To access the Advanced Menu: • In the Base Menu, select the Advanced Menu (`Adv`). • Press the Right Button to confirm the selection.

The default settings of Advanced Menu (Device Configuration Menu)

Parameter	Definition
	**The Menu Exit** - Used to exit the menu. To exit from menu: • In Advanced Menu, select parameter `P000`. • Press the Right Control to confirm the selection. **Note:** This parameter is for menu navigation only. It cannot be edited or adjusted
	**Wire Feed Speed (WFS) units** – Used to select the Wire Feed Speed (WFS) units. Default setting: • `CE` = m/min Available settings: • `CE` = m/min • `US` = in/min
	**Gun Offset Adjustment** - Used to adjust the wire feed speed calibration of the pull motor in a push-pull gun. This adjustment should only be performed if other corrective actions do not resolve any push-pull feeding issues. A tachometer (RPM meter) is required to perform the pull gun motor offset calibration. • Default setting: 0 • Calibration range: -100 to +100 To perform the calibration: **1.** Release the pressure arm on both the pull and push wire drives. **2.** Set the wire feed speed to 5.08 m/min. **3.** Remove the wire from the pull wire drive. **4.** Hold the tachometer (RPM meter) to the drive roll in the pull gun. **5.** Pull the trigger on the push-pull gun. **6.** Measure the rpm of the pull motor. The rpm should be between 115 and 125 rpm. If necessary, decrease the calibration setting to slow the pull motor, or increase the calibration setting to speed up the motor. **Note:** This calibration procedure applies only to the recommended push-pull torch (W100000376 LINCGUN® PUSH-PULL 400W 8M).

Parameter	Definition
	**Crater Delay** - Used to bypass the Crater sequence when making short tack welds. If the trigger is released before the delay time expires, the Crater sequence is skipped and the weld ends. If the trigger is released after the delay time expires, the Crater sequence operates normally (if enabled). • Adjustment range: OFF to 10.0 seconds • Default setting: OFF
	**Remote Control Type** - Used to select the type of analog remote control device. Digital remote controls (with a display) are configured automatically. Available settings: • SPOO; Spool Gun = Use for MIG welding with a spool gun equipped with a potentiometer for wire feed speed control. • PUSH; Push-Pull Gun = Use for MIG welding with a push-pull gun equipped with a potentiometer for wire feed speed control. • tI9; TIG Amp Control = Use for TIG welding with a foot or hand-operated current control device (Amptrol). While TIG welding, the Left Control on the User Interface sets the maximum current obtained when the TIG amp control is at its maximum setting. • StIC; Stick/Gouge Remote = Use this setting when performing stick welding or gouging with a remote output control device. While stick welding, the upper left Control on the User Interface sets the maximum current obtained when the stick remote is at its maximum setting. • ALL ; All Mode Remote = Enables the remote control to operate in all weld modes, consistent with standard functionality of systems equipped with 6-pin and 7-pin remote control connections. • JOYS (default setting); Joystick MIG Gun = Use for MIG welding with a joystick-controlled MIG gun.Stick, TIG, and gouge welding currents are set using the User Interface.
	**Display Trim as Volts** – Determines how Trim is displayed. Available settings: • YES = Trim values are displayed as voltage. • nO (default setting) = Trim is displayed according to the format defined in the weld set. **Note:** This option may not be available on all machines. The power source must support this function; otherwise, the option is not displayed in the menu.

Parameter	Definition
	**Arc Start/Loss Error Time** - This option can be used to optionally shut off output if an arc is not established, or is lost for a specified amount of time. Error 269 will be displayed if the machine times out. If the value is set to OFF, machine output will not be turned off if an arc is not established or arc is lost. The trigger can be used to hot feed the wire (default). If a value is set, the machine output will shut off if an arc is not established within the specified amount of time after the trigger is pulled or if the trigger remains pulled after an arc is lost. To prevent nuisance errors, set Arc Start/Loss Error Time to an appropriate value after considering all welding parameters (run-in wire feed speed, weld wire feed speed, electrical stick out, etc). • Adjustment range: from OFF to 10.0 seconds • Default setting: OFF **Note:** This parameter is disabled in SMAW, GTAW, and gouging mode
	**Joystick Configuration** - Used to define the behavior of the left and right joystick positions: • OFF (default setting) = Disable Joystick = The joystick does not function. • trIM = WFS/Trim = The left and right joystick positions adjust Arc Length Trim or Arc Voltage, depending on the selected Weld Mode. • JOb = "WFS/Job"(memory) = The left and right joystick positions select a User Memory slot when not welding. **Note:** In all modes other than OFF, the up and down joystick positions adjust the Wire Feed Speed both during welding and when not welding.
	**Display Workpoint as Amps** – Determines how the workpoint is displayed. Available settings: • nO (default setting) = The workpoint is displayed according to the weld set the workpoint. • YES = Workpoint values are displayed as amperage. **Note:** This option may not be available on all machines. The power source must support this function; otherwise, the option is not displayed in the menu.
	**Feedback Persist –** Determines how feedback values are displayed after welding. Available settings: • nO (default setting) – The last recorded feedback values flash for 5 seconds after welding, then return to the normal display. • YES –The last recorded feedback values continue to flash after welding until a Control or Button is pressed, or an arc is struck.

Parameter	Definition
	**Sense From Studs** - Used for diagnostic purposes only. This setting is reset to `nO` when the power is cycled. Available settings: • `nO` (default setting) = Voltage sensing is determined automatically by the selected Weld Mode and system settings. • `YES` = Voltage sensing is forced to the power source output studs. **Note:** This option may not be available on all machines. The power source must support this function; otherwise, the option is not displayed in the menu.
 	**Wire Feeder Door Safety Switch** - This function prevents welding when the wire feeder door is open. Available Settings: • `nO` (default setting) - Welding can be initiated even if the wire feeder door is open. • `YES` - Welding is blocked when the wire feeder door is open. **Operation** When the function is enabled (`YES`): • If the operator attempts to start welding while the wire feeder door is open, the display shows: `DOOr OPEn` • Welding is inhibited until the wire feeder door is properly closed.
	**Brightness Control** - Enables adjustment of the display brightness level. • Regulation range: from 1 to 10 • Default setting: 5
	**Restore Factory Settings** – Use this function to restore the device to factory default settings. Procedure: • Press the Right Control to confirm the selection. • Use the Right Control to select `YES`. • Press the Right Control again to confirm. **Note:** After the device has been restarted, the P097 value is set to `nO`.
	**Show Test Modes**– Used for calibration and test functions. To use the Test Modes: • The Right Display shows `LOAd`. • Press the Right Control to confirm the selection. • The Right Display shows `dOnE`. **Note:** After restarting the device, parameter P099 resets to `LOAd`.

Parameter	Definition
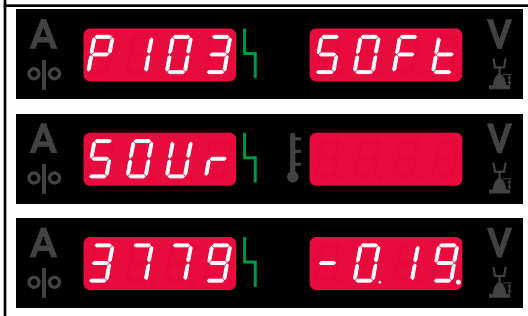	**View Software Version Info** – Used to view the software versions of system objects. To read the software version: • In the Advanced Menu, select parameter `P103`. • Press the Right Control to confirm the selection. • Turn the Right Control to select the desired object. • Press the Right Control to confirm the selection. • The software version is displayed. **Note:** Parameter P103 is a diagnostic parameter and is for read-only use.
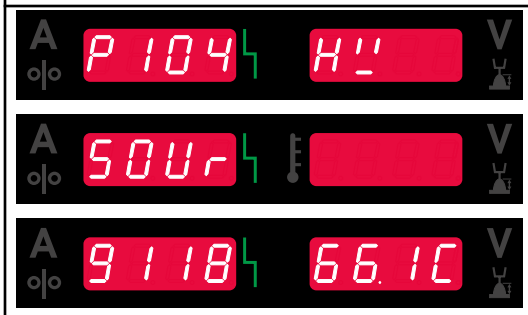	**View Hardware Version Info** – Displays the hardware version of system objects. To read the hardware version: • In the Advanced Menu, select parameter `P104`. • Press the Right Control to confirm the selection. • Turn the Right Control to select the desired object. • Press the Right Control to confirm the selection. • The hardware version is displayed. **Note:** Parameter P104 is a diagnostic, read-only parameter.

FILLING THE RESERVOIR AND WATER LINES

⚠ CAUTION



Avoid contact with coolant. Wear waterproof gloves and protective eye protection.

⚠ CAUTION



Do not operate the cooler if the reservoir is not filled or if the torch/gun hoses are disconnected from the cooling unit. Failure to observe this warning may result in internal damage to the cooler.



The cooler must be filled with coolant and operated in the horizontal position only.



Never operate the cooler with an empty reservoir!



Do not start the cooler with less than 3 liters of coolant. Insufficient coolant may prevent proper priming and may damage the pump.



Do not add more than 4.5 liters of coolant to the reservoir.



Use only the recommended coolant.



Do not use:

- Welding industry coolants containing oil-based substances. These may damage plastic components and cannot be removed from the system.
- Automotive antifreeze. It may damage the pump and the heat exchanger.

Note: Recommended equipment is listed in the ACCESSORIES AND OPTIONS on page E-1 section and is available for separate purchase.

To fill the reservoir and water lines

Preparation:



- Assemble the welding system.
- Verify that all components are properly installed and tightened.
- Use only the recommended coolant type.



Turn ON the power source. If the system is assembled correctly, the connected cooler is detected automatically.

3

When the cooler is detected for the first time, the filling procedure starts automatically.

Important: Remove the reservoir cap to prevent vacuum formation.

Press the Right Control to continue.



4

Fill the reservoir with coolant to the maximum level (4.5 liters). Press the Right Control to continue



5

Prepare BYPASS (closing loop hose for filling procedure). Press the Right Control.

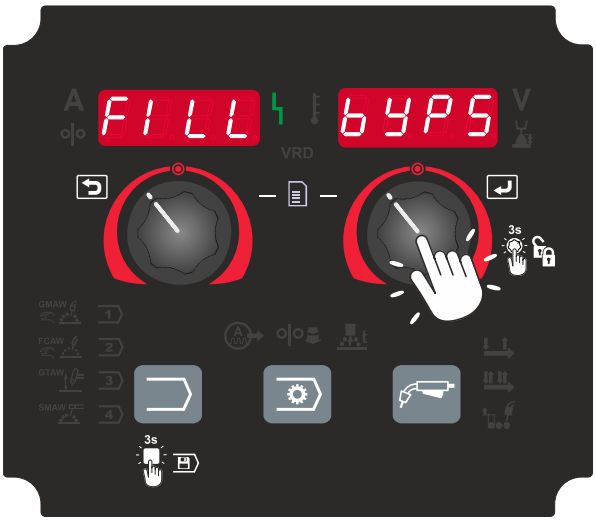

6 Connect the BYPASS hose (short hose with quick connectors) to the blue and red outlets on the cooler front panel. Press the Right Control.

Note: Observe the coolant circuit.



7 Wait until coolant circulates through the system and returns to the reservoir.



8 Disconnect the BYPASS hose.

9 Connect the welding torch hoses and interconnection cable (for systems with a separate wire feeder).



10 Wait until coolant fully circulates through the system again.



11 Check the coolant level. Add coolant if necessary to maintain the level between MIN and MAX, which is present on cooler front label. Install and tighten the reservoir cap.

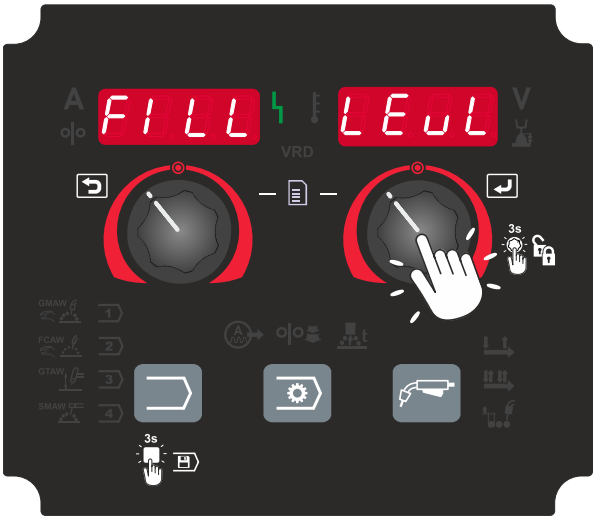

12 If the filling process is completed successfully, COMP is displayed and the cooler switches to AUTO mode.



FILLING PROCEDURE FAILED

Filling the Reservoir and Coolant Lines (First Attempt)

If the filling procedure is not completed successfully, an error message is displayed:



Filling the Reservoir and Coolant Lines (Second Attempt)

If the filling procedure is not completed successfully, an error message is displayed:



Turn OFF the power source and check the following:

- Cooling system hoses for damage or kinks
- Coolant level

After completing the inspection, turn ON the power source. The machine automatically restarts the filling procedure.

⚠ WARNING

If the filling procedure still cannot be completed, contact an authorized Technical Service Center or Lincoln Electric.

NO COOLANT FLOW

If no coolant flow is detected by the system during welding, Error 92 will be displayed on the user interface. The machine will automatically protect itself by stopping the welding process. The message will appear approximately 3 seconds after the fault is detected.

Press the Left Control or the Welding Parameters Button to clear the error message. If the cooler is in AUTO mode, a machine reset is required to continue welding. This behavior is to protect the pump from damage and the torch from overheating.

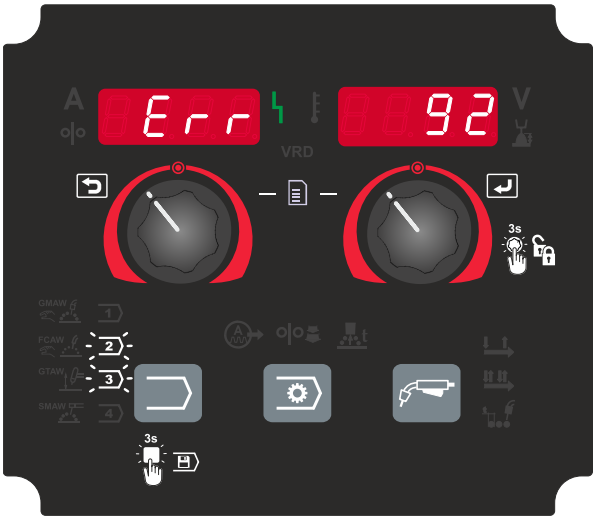

⚠ WARNING

If the machine continues to display Error 92 during subsequent welding attempts, contact an authorized Technical Service Center or Lincoln Electric.

LOCKING THE USER INTERFACE

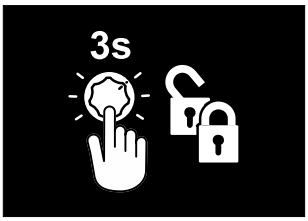

The User Interface can be locked to prevent accidental parameter changes.

The function is indicated on the User Interface next to the Right Control by a lock symbol and 3s.

To lock the User Interface:

1. Press and hold the Right Control for 3 seconds.

2. `LOCK` appears on the Right Display and `On` appears on the Left Display.



3 Any attempt to adjust settings causes `LOCK PrES` to be displayed.



To unlock the User Interface:

1 Press and hold the Right Control for 3 seconds.



2 `LOCK` appears on the Right Display and `OFF` appears on the Left Display.



3 The User Interface is unlocked and returns to normal operation.

GMAW, FCAW-GS AND FCAW-SS PROCESS IN NON-SYNERGIC WELD MODES

The GMAW, FCAW-GS, and FCAW-SS processes are available as Weld Modes.

Table 4 :Weld Mode numbers

Process	SPEEDTEC® 400S/500S
GMAW	5
FCAW-GS	7
FCAW-SS	6

Note: The list of available Weld Modes depends on the power source.

In non-synergic Weld Mode, Wire Feed Speed and Welding Voltage are independent parameters and must be set by the operator.

For Weld Mode 5 and 7, the following parameters can be set:

- Wire Feed Speed, WFS
- The welding voltage
- Burnback Time
- Run-in WFS
- Preflow Time/ Postflow Time
- 2-Step / 4-Step
- Spot Time
- Polarity
- Start Procedure:
  - Start Time
  - Wire Feed Speed
  - Voltage
- Crater:
  - Crater Time
  - Wire Feed Speed
  - Voltage
- Arc Control:
  - Pinch

For Weld Mode 6, the following parameters can be set:

- Wire Feed Speed, WFS
- The welding voltage
- Burnback Time
- Run-in WFS
- 2-Step / 4-Step
- Spot Time
- Polarity
- Start Procedure:
  - Start Time
  - Wire Feed Speed

    - Voltage
- Crater:
    - Crater Time
    - Wire Feed Speed
    - Voltage
- Arc Control:
    - Pinch

Pinch - Controls arc characteristics during short-circuit welding. Increasing the Pinch value produces a crisper arc and may increase spatter. Decreasing the Pinch value produces a softer arc with reduced spatter.

- Adjustment range: -10.0 to +10.0
- Default setting: 0.0

GMAW AND FCAW-GS PROCESS IN SYNERGIC WELD MODES (CV)

Table 5 :GMAW and FCAW-GS synergic Weld Modes for SPEEDTEC® 400S/500S

Wire Material	Gas	Wire Diameter [mm]						
		0.8	0.9	1.0	1.2	1.32	1.4	1.6
Steel	82Ar / 18CO_2	10	23	36	49	61	68	77
Steel	92Ar / 8CO_2	1034	1047	1060	1073	1085	1092	1101
Steel	CO_2	11	24	37	50	62	69	78
Stainless	98Ar / 2CO_2	85	93	100	108			
Aluminum AlSi	Ar			129	134			139
Aluminum AlMg	Ar			147	152			157
Metal Core	82Ar / 18CO_2			164	168		174	180
Cored Wire	82Ar / 18CO_2				231		236	
Cored Wire	90Ar / 10CO_2				1255			1264
Cored Wire	CO_2				232		237	241
Si Bronze	Ar			188	194			
Copper Aluminum	Ar			215	218			

Note: The list of available Weld Modes depends on the power source.

In synergic Weld Mode, the Welding Voltage is not set directly by the operator. The correct voltage is automatically calculated by the machine based on the selected Weld Mode and Wire Feed Speed (WFS).

If required, the welding voltage can be adjusted using the Right Control. When adjusting voltage, the display indicates:

- Above optimal voltage



- At optimal voltage



- Below optimal voltage



The following parameters can be set manually:

- Burnback Time
- Run-in WFS
- Preflow Time/ Postflow Time
- 2-Step / 4-Step
- Spot Time
- Polarity
- Start Procedure:
  - Start Time
  - Wire Feed Speed
  - Voltage
- Crater:

    - Crater Time
    - Wire Feed Speed
    - Voltage
- Arc Control:
    - Pinch

Pinch - Controls arc characteristics during short-circuit welding. Increasing the Pinch value produces a crisper arc and may increase spatter. Decreasing the Pinch value produces a softer arc with reduced spatter.

- Adjustment range: -10.0 to +10.0
- Default setting: 0.0

WELDING HIGH PENETRATION SPEED (HPS™) PROCESS IN SYNERGIC WELD MODES

Table 6 :HPS™ synergic Weld Modes for SPEEDTEC® 400S/500S

Wire Material	Gas	Wire Diameter [mm]						
		0.8	0.9	1.0	1.2	1.32	1.4	1.6
Steel	82Ar / 18CO_2			30	52	64		
Steel	92Ar / 8CO_2			1063	1076	1088		

Note: The list of available Weld Modes depends on the power source.

In synergic Weld Mode, the Welding Voltage is not set directly by the operator. The correct voltage is automatically calculated by the machine based on the selected Weld Mode and Wire Feed Speed (WFS).

If required, the welding voltage can be adjusted using the Right Control. When adjusting voltage, the display indicates:

- Above optimal voltage



- At optimal voltage



- Below optimal voltage



High Penetration Speed (HPS™)

HPS™ is a modified welding process developed by Lincoln Electric. It combines the advantages of spray arc and short-circuit arc Weld Mode.

Compared to standard spray arc, lower welding voltage results in reduced heat input and a more concentrated arc.

Advantages:

- Allows welding with extended stickout.
- Produces a concentrated arc with increased penetration.
- Reduces workpiece distortion due to lower heat input.
- Increases productivity through higher welding speeds and reduced preparation requirements.

The following parameters can be set manually:

- Burnback Time
- Run-in WFS
- Preflow Time/ Postflow Time
- 2-Step / 4-Step
- Spot Time
- Polarity
- Start Procedure:
  - Start Time

  - Wire Feed Speed
  - Voltage
- Crater:
  - Crater Time
  - Wire Feed Speed
  - Voltage
- Arc Control:
  - Pinch

Pinch - Controls arc characteristics during short-circuit welding. Increasing the Pinch value produces a crisper arc and may increase spatter. Decreasing the Pinch value produces a softer arc with reduced spatter.

- Adjustment range: -10.0 to +10.0
- Default setting: 0.0

SPEED SHORT ARC (SSA™) PROCESS IN SYNERGIC WELD MODES

Table 7 :SSA™ synergic Weld Modes for SPEEDTEC® 400S/500S

Wire Material	Gas	Wire Diameter [mm]						
		0.8	0.9	1.0	1.2	1.32	1.4	1.6
Steel	82Ar / 18CO_2	12	25	38	51	63		
Steel	92Ar / 8CO_2	1036	1049	1062	1075	1087		
Stainless	98Ar / 2CO_2	86	94	101	109			

Note: The list of available Weld Modes depends on the power source.

In synergic Weld Mode, the Welding Voltage is not set directly by the operator. The correct voltage is automatically calculated by the machine based on the selected Weld Mode and Wire Feed Speed (WFS).

If required, the welding voltage can be adjusted using the Right Control. When adjusting voltage, the display indicates:

- Above optimal voltage



- At optimal voltage



- Below optimal voltage



Speed Short Arc (SSA™)

SSA™ is a controlled short-circuit transfer process developed by Lincoln Electric. It extends the operating range of short-circuit welding to higher Wire Feed Speeds. The process prevents transition to globular transfer and maintains stable arc behavior. Higher Wire Feed Speeds are supported by increased peak current, enabling faster droplet formation and detachment.

Advantages:

- Increased productivity through higher wire feed speeds compared to conventional short arc.
- Higher wire feed speeds (WFS), typically achievable only in pulse modes
- Lower heat input, reducing distortion and burn-through risk
- Faster welding performance with improved process efficiency.
- Controlled metal transfer, enabling faster droplet formation and detachment.
- Reduced spatter levels

The following parameters can be set manually:

- Burnback Time
- Run-in WFS
- Preflow Time/ Postflow Time
- 2-Step / 4-Step
- Spot Time

- Polarity
- Start Procedure:
  - Start Time
  - Wire Feed Speed
  - Voltage
- Crater:
  - Crater Time
  - Wire Feed Speed
  - Voltage
- Arc Control:
  - Pinch

Pinch - Controls arc characteristics during short-circuit welding. Increasing the Pinch value produces a crisper arc and may increase spatter. Decreasing the Pinch value produces a softer arc with reduced spatter.

- Adjustment range: -10.0 to +10.0
- Default setting: 0.0

GMAW-P PROCESS IN SYNERGIC WELD MODES

Table 8 :GMAW-P synergic Weld Modes for SPEEDTEC® 400S/500S

Wire Material	Gas	Wire Diameter [mm]						
		0.8	0.9	1.0	1.2	1.32	1.4	1.6
Steel	82Ar / 18CO_2	14	27	40	53			81
Steel	92Ar / 8CO_2	1038	1051	1064	1077			1105
Steel	95Ar / 5O_2	15		41	54			
Stainless	98Ar / 2CO_2	87	95					
Aluminum AlSi	Ar			130	135			140
Aluminum AlMg	Ar			148	153			158
Metal Core	82Ar / 18CO_2			165	169		175	181
Cored Wire	82Ar / 18CO_2				233			
Si Bronze	Ar			189	195			
Copper Aluminum	Ar			216	219			

Note: The list of available Weld Modes depends on the power source.

In synergic Weld Mode, the Welding Voltage is not set directly by the operator. The correct voltage is automatically calculated by the machine based on the selected Weld Mode and Wire Feed Speed (WFS).

GMAW-P (PULSED MIG)

GMAW-P is a pulse welding process that produces a low-spatter arc and enables out-of-position welding. During pulse welding, the current alternates between background and peak levels. Each pulse transfers a controlled droplet of molten metal to the weld pool (puddle).

Wire Feed Speed (WFS) is the primary control parameter. As WFS is adjusted, the power source automatically adjusts waveform parameters to maintain stable arc characteristics.

Trim is used as a secondary control (Right Display).

Trim range: 0.50 to 1.50

Nominal setting: 1.00



Trim adjusts the arc length:

- Increasing Trim increases arc length.
- Decreasing Trim decreases arc length.

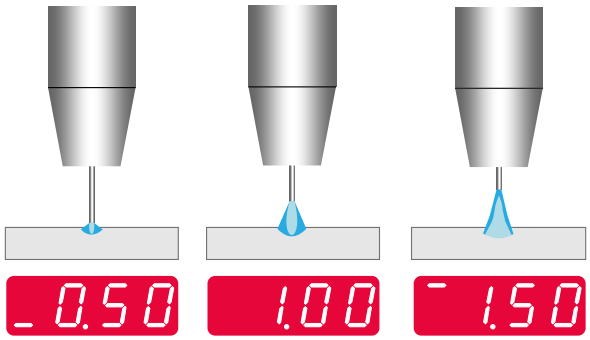

When Trim is adjusted, the machine automatically recalculates voltage, current, and waveform timing.

The following parameters can be set manually:

- Burnback Time
- Run-in WFS
- Preflow Time/ Postflow Time
- 2-Step / 4-Step
- Spot Time
- Polarity
- Start Procedure:
  - Start Time
  - Wire Feed Speed
  - Voltage
- Crater:
  - Crater Time
  - Wire Feed Speed
  - Voltage
- Arc Control:
  - UltimArc™

UltimArc™ - Available in GMAW-PULSE Weld Modes only. Adjusts the welding arc focus and shape. Suitable for high-speed sheet metal welding.

- Adjustment range: -10 to +10
- Default setting: 0.0

Increasing the value produces a tighter, stiffer arc. Lower values produce a wider, softer arc.

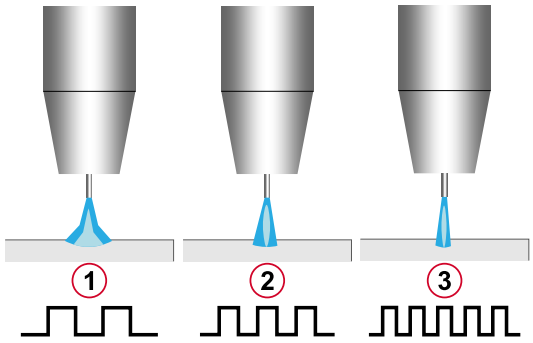

1. -10.0 - Wide, soft arc
2. 0.0 - Nominal Ultimarc setting point
3. +10.0 - Tight, focused arc

SOFT SILENCE PULSE (SSP™) PROCESS IN SYNERGIC WELD MODES

Table 9 :SSP™ synergic Weld Modes for SPEEDTEC® 400S/500S

Wire Material	Gas	Wire Diameter [mm]						
		0.8	0.9	1.0	1.2	1.32	1.4	1.6
Steel	82Ar / 18CO_2	16	29	42	55	65	74	83
Steel	92Ar / 8CO_2	1040	1053	1066	1079	1089	1098	1107
Steel	95Ar / 5O_2	17		43	56			
Stainless	98Ar / 2CO_2			103	111			
Aluminum AlSi	Ar		126	131	136			141
Aluminum AlMg	Ar		144	149	154			159

Note: The list of available Weld Modes depends on the power source.

In synergic Weld Mode, the Welding Voltage is not set directly by the operator. The correct voltage is automatically calculated by the machine based on the selected Weld Mode and Wire Feed Speed (WFS).

SOFT SILENCE PULSE (SSP™)

SSP™ is a pulse welding process with a specially designed waveform developed by Lincoln Electric. It produces a very soft and quiet arc with improved puddle control. The process is well suited for stainless steel welding and provides improved wetting compared to standard pulse. Reduced arc noise improves operator comfort, especially in confined or enclosed work environments.

During pulse welding, the current alternates between background and peak levels. Each pulse transfers a controlled droplet of molten metal to the weld pool.

The stable arc allows welding in all positions.

Wire Feed Speed (WFS) is the primary control parameter. As WFS is adjusted, the power source automatically adjusts waveform parameters to maintain stable arc characteristics.

Trim is used as a secondary control (Right Display).

Trim range: 0.50 to 1.50

Nominal setting: 1.00



Trim adjusts the arc length:

- Increasing Trim increases arc length.
- Decreasing Trim decreases arc length.

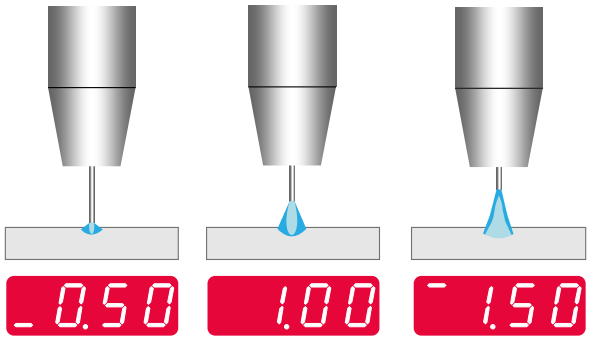

When Trim is adjusted, the machine automatically recalculates voltage, current, and waveform timing.

The following parameters can be set manually:

- Burnback Time
- Run-in WFS
- Preflow Time/ Postflow Time
- 2-Step / 4-Step
- Spot Time
- Polarity
- Start Procedure:
  - Start Time
  - Wire Feed Speed
  - Voltage
- Crater:
  - Crater Time
  - Wire Feed Speed
  - Voltage
- Arc Control:
  - UltimArc™

UltimArc™ - Available in GMAW-PULSE Weld Modes only. Adjusts the welding arc focus and shape. Suitable for high-speed sheet metal welding.

- Adjustment range: -10 to +10
- Default setting: 0.0

Increasing the value produces a tighter, stiffer arc. Lower values produce a wider, softer arc.

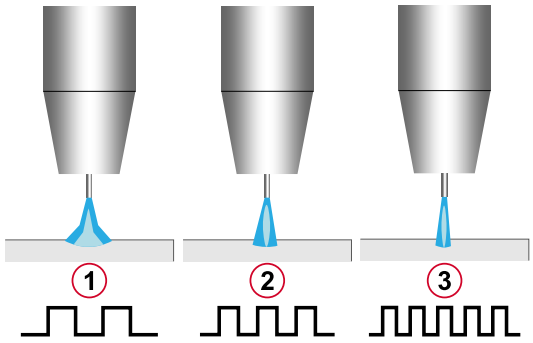

1. -10.0 - Wide, soft arc
2. 0.0 - Nominal Ultimarc setting point
3. +10.0 - Tight, focused arc

SMAW PROCESS

The SMAW process is available as a Weld Mode.

Table 10 :Weld Mode number

Process	SPEEDTEC® 400S/500S
SMAW (MMA)	1

Note: The list of available Weld Modes depends on the power source.

For Weld Mode 1, the following parameters can be set:

- Welding current
- Switch on / switch off the output voltage on the output lead
- Arc Control:
  - ARC FORCE
  - HOT START

ARC FORCE - Temporarily increases output current to prevent electrode sticking and improve arc stability.

Lower values produce a softer arc with less short-circuit current. Higher values produce a more forceful arc with increased short-circuit current and may increase spatter.

- Adjust range: -10 to +10
- Default setting: 0.0

HOT START - Temporarily increases the nominal current during arc initiation to improve arc starting when using electrodes.

- Regulation range: from 0 to +10.0
- Default settings: +5.0

GTAW / GTAW-PULSE PROCESS

The GTAW / GTAW-PULSE process is available as a Weld Mode.

Table 11 :Weld Mode numbers

Process	SPEEDTEC® 400S/500S
GTAW DC(-)	3
GTAW- PULSE	3

Note: The list of available Weld Modes depends on the power source.

For Weld Mode 3, the following parameters can be set:

- Welding current
- Switch on / switch off the output voltage on the output lead

  Note: It does not work in the 4-Step.
- Postflow Time
- 2-Step / 4-Step
- Start Procedure:
  - Start Time
  - Welding current
- Crater:
  - Crater Time
  - Welding current
- Arc Control:
  - Frequency
  - Background current

Frequency – Affects arc width, shape, and heat input to the weld. Available in GTAW Weld Mode only.

For pulse welding, adjusts arc focus and stability. Increasing the Frequency value produces a tighter, stiffer arc, suitable for high-speed sheet metal welding.

- Adjustment range: 0 to 100 Hz
- Default setting: 0 = DC (-), pulse function disabled

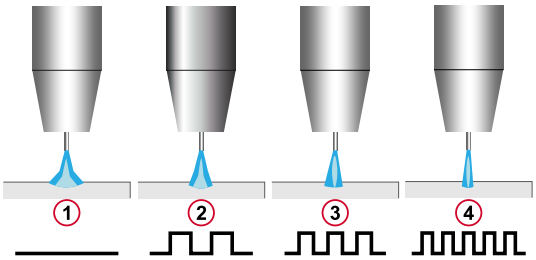

1. 0 – DC (–), pulse function disabled.
2. 0.01 to 50 Hz – Low frequency, wider arc.
3. 50 Hz – Medium frequency and arc width.
4. 50 to 100 Hz – High frequency, tight and focused arc.

Background Current - Percentage value of nominal welding current. Adjusts the overall heat input to the weld and influences the shape of the back bead.

Note: Adjust range depends on the power source.

GOUGING

The gouging process is available as a Weld Mode.

Table 12 :Weld Mode number

Process	SPEEDTEC® 400S/500S
Gouging	9

Note: The list of available Weld Modes depends on the power source.

For Weld Mode 9, the following parameters can be set:

- Gouging current
- Output voltage ON/OFF on the output lead

CONNECTION OVERVIEW

CONNECTION OVERVIEW

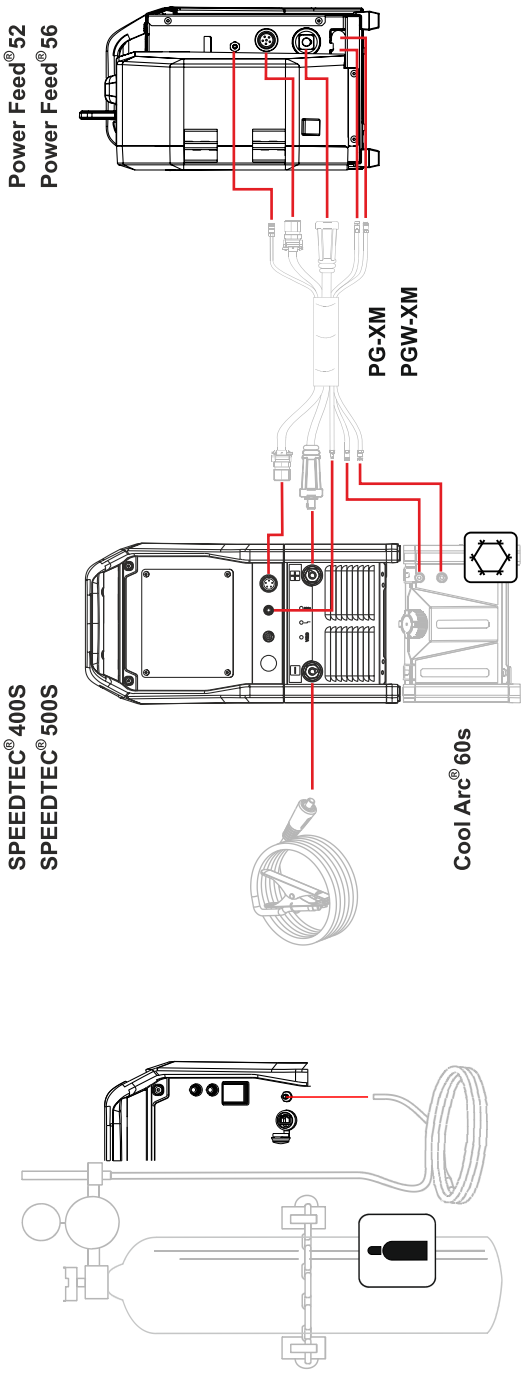

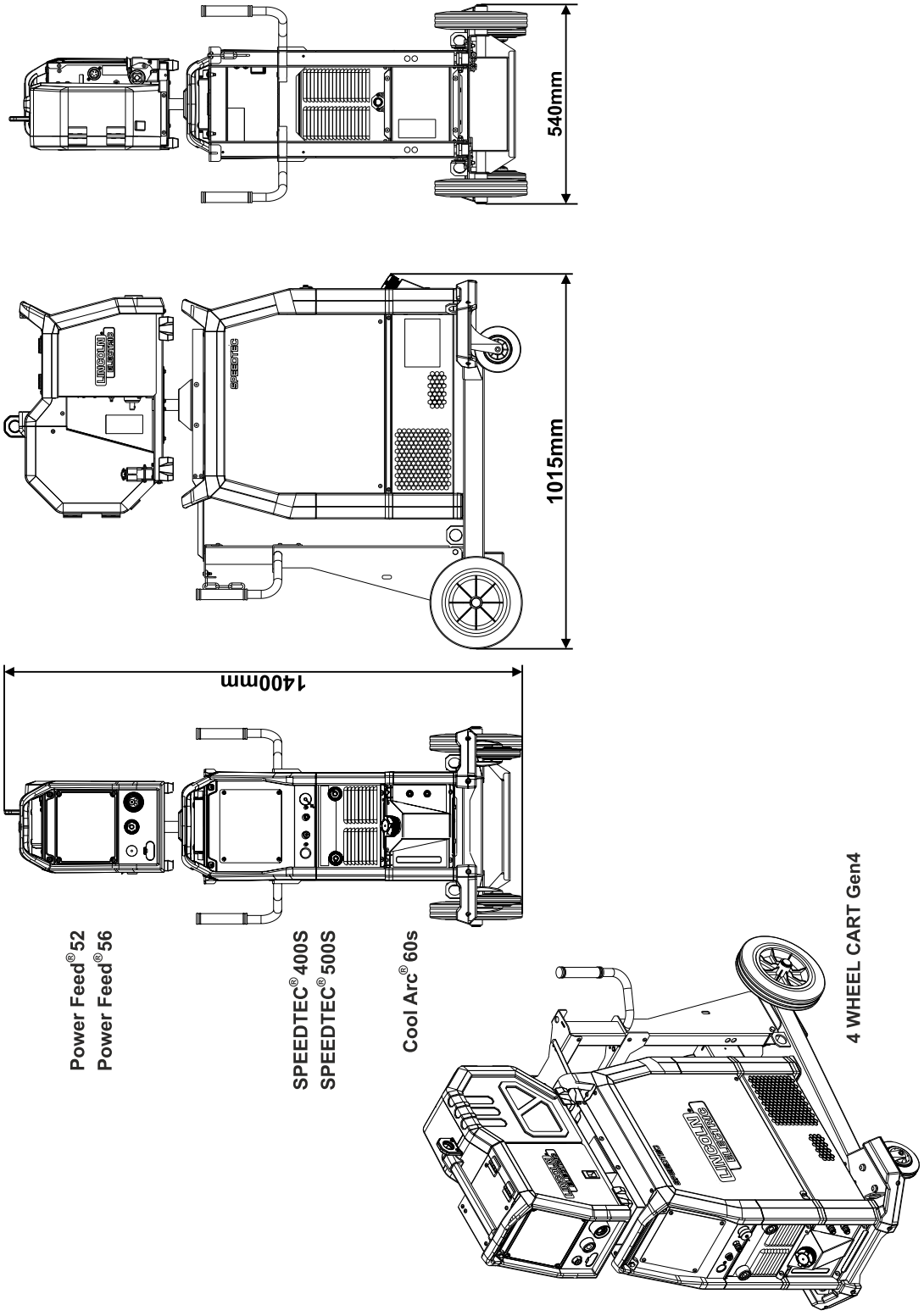
540mm
1015mm
1400mm
Power Feed® 52
Power Feed® 56
SPEEDTEC® 400S
SPEEDTEC® 500S
Cool Arc® 60s
4 WHEEL CART Gen4

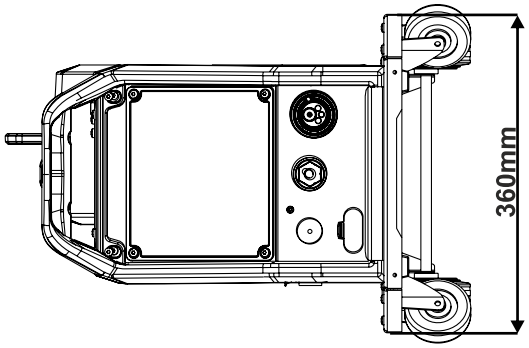

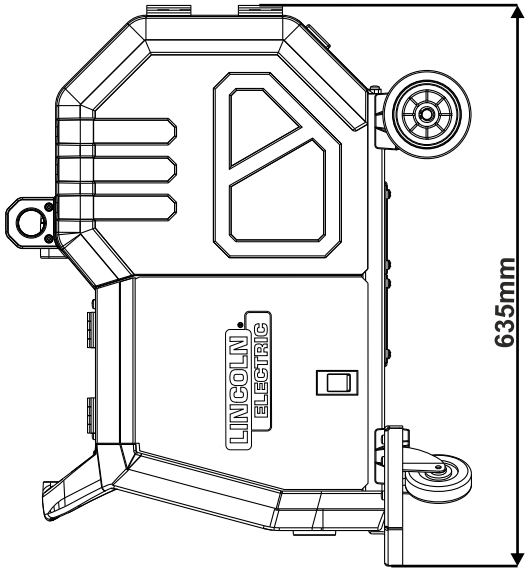

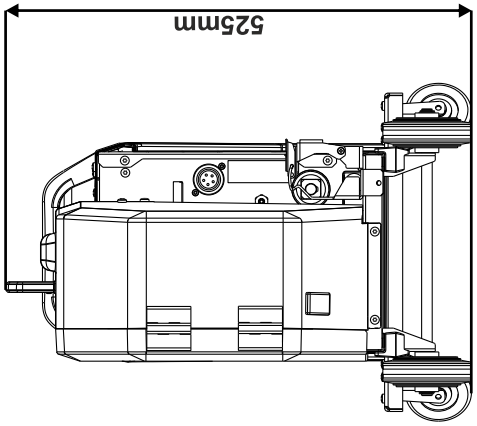

Power Feed®52
Power Feed®56

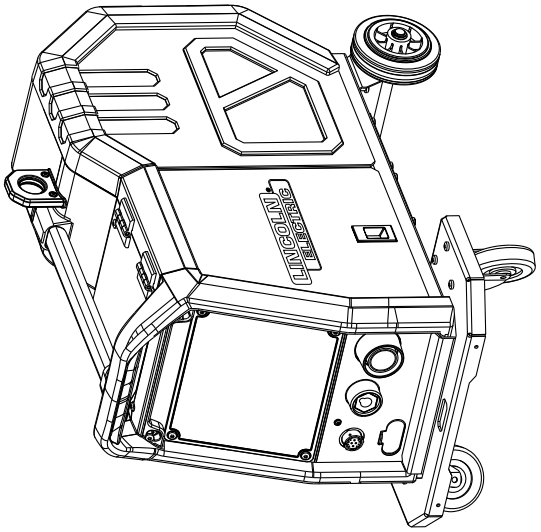

Power Feed®WHEELS KIT

ACCESSORIES AND OPTIONS

ACCESSORIES AND OPTIONS

COMPATIBLE POWER SOURCES	
Part No.	**Description**
K14457-1	**SPEEDTEC® 400S**
K14458-1	**SPEEDTEC® 500S**
COMPATIBLE COOLING UNIT AND COOLANT	
Part No.	**Description**
K14469-1	**Cool Arc® 60s**
W000010167	FREEZCOOL 9.6L (coolant)
ACCESSORIES & OPTIONS	
Part No.	**Description**
KP10519-8	TIG ADAPTOR
K10158-1	ADAPTER FOR SPOOL TYPE B300
K10158	ADAPTER FOR SPOOL TYPE B300
R-1019-125-1/08R	ADAPTER FOR SPOOL S200
K14200-1	CONTROL PANEL COVER KIT
K14203-1	WIRE FEEDER DRUM QUICK CONNECTOR
K14467-1	WHEELS KIT SET FOR PF FEEDERS
K14468-1	GAS FLOW REGULATOR KIT
K14473-1	USER INTERFACE PENDANT BOX 7M
K14476-1	MIG GUN BALANCED ARM Gen4
K14477-1	4 WHEEL CART DUAL Gen4
K14479-1	4 WHEEL CART Gen4
WELDING CABLES	
Part No.	**Description**
W000260682	KIT ARC 50C50 PLUS
W000010136	FLAIR® 600 GOUGING TORCH with airflow regulated on the torch
W100000376	LINCGUN® PUSH-PULL 400W 8M
INTERCONNECTION CABLES	
Part No.	**Description**
K14472-PG-2M	CABLE PACK 5PIN G 95MM2 2M
K14472-PG-5M	CABLE PACK 5PIN G 95MM2 5M
K14472-PG-10M	CABLE PACK 5PIN G 95MM2 10M
K14472-PG-15M	CABLE PACK 5PIN G 95MM2 15M
K14472-PG-20M	CABLE PACK 5PIN G 95MM2 20M
K14472-PG-25M	CABLE PACK 5PIN G 95MM2 25M
K14472-PG-30M	CABLE PACK 5PIN G 95MM2 30M
K14473-PGW-2M	CABLE PACK 5PIN W 95MM2 2M
K14473-PGW-5M	CABLE PACK 5PIN W 95MM2 5M
K14473-PGW-10M	CABLE PACK 5PIN W 95MM2 10M
K14473-PGW-15M	CABLE PACK 5PIN W 95MM2 15M
K14473-PGW-20M	CABLE PACK 5PIN W 95MM2 20M
K14473-PGW-25M	CABLE PACK 5PIN W 95MM2 25M

INTERCONNECTION CABLES	
Part No.	**Description**
K14473-PGW-30M	CABLE PACK 5PIN W 95MM2 30M
ROLL KIT FOR SOLID WIRES	
Part No.	**Description**
KP14466-0608SW	DRIVE ROLL KIT 0.6-0.8
KP14466-0911SW	DRIVE ROLL KIT 0.9-1.1
KP14466-1012SW	DRIVE ROLL KIT 1.0-1.2
KP14466-1216SW	DRIVE ROLL KIT 1.2-1.6
KP14466-1420SW	DRIVE ROLL KIT 1.4-2.0
KP14466-1624SW	DRIVE ROLL KIT 1.6-2.4
ROLL KIT FOR CORE WIRES	
Part No.	**Description**
KP14466-1012CW	DRIVE ROLL KIT 1.0-1.2
KP14466-1216CW	DRIVE ROLL KIT 1.2-1.6
KP14466-1420CW	DRIVE ROLL KIT 1.4-2.0
KP14466-1624CW	DRIVE ROLL KIT 1.6-2.4
ROLL KIT FOR ALUMINUM WIRES	
Part No.	**Description**
KP14466-0810AW	DRIVE ROLL KIT 1.0-1.2
KP14466-1216AW	DRIVE ROLL KIT 1.2-1.6
GUIDE	
Part No.	**Description**
R-2010-006-1R	OUTLET GUIDE KIT Ø 2mm
0744-000-318R	INLET AND INTERMEDIATE GUIDE Ø 0.6-1.6mm
0744-000-319R	INLET AND INTERMEDIATE GUIDE Ø 1.6-2.8mm

MAINTENANCE

MAINTENANCE

⚠ WARNING

For any repair operations, modifications, or maintenance activities, it is recommended to contact the nearest Technical Service Center or Lincoln Electric. Repairs or modifications performed by unauthorized personnel will result in the loss of the manufacturer's warranty.

⚠ WARNING

Any noticeable damage should be reported immediately and repaired.

Routine maintenance (daily):

- Check the condition of insulation and connections of the work leads and the insulation of the power lead. If any damage is found, replace the lead immediately.
- Remove spatter from the welding gun nozzle. Spatter buildup may interfere with proper shielding gas flow.
- Check the condition of the welding gun and replace it if necessary.
- Check the condition and operation of the cooling fan. Ensure that all airflow openings are clean and unobstructed.

Periodic maintenance (every 200 operating hours, but at least once per year):

- Keep the machine clean. Using dry, low-pressure compressed air, remove dust from the external surfaces and from inside the machine.
- If required, clean and tighten all welding terminals.

The frequency of maintenance operations may vary depending on the operating environment.

⚠ WARNING

Do not touch electrically live parts.

⚠ WARNING

Before removing any covers, switch off the equipment and disconnect the power lead from the mains supply.

⚠ WARNING



The mains supply must be disconnected before performing any maintenance or service work. After each repair, perform appropriate safety checks before returning the equipment to operation.

TROUBLESHOOTING

HOW TO USE TROUBLESHOOTING GUIDE

⚠ WARNING



Service and Repair should only be performed by Lincoln Electric Factory Trained Personnel. Unauthorized repairs performed on this equipment may result in danger to the technician and machine operator and will invalidate your factory warranty. For your safety and to avoid Electrical Shock, please observe all safety notes and precautions detailed throughout this manual.

This Troubleshooting Guide is provided to help you locate and repair possible machine malfunctions. Simply follow the three-step procedure listed below.

1. **LOCATE PROBLEM (SYMPTOM)**

   Look under the column labeled “PROBLEM (SYMPTOMS)”. This column describes possible symptoms that the machine may exhibit. Find the listing that best describes the symptom that the machine is exhibiting.

2. **POSSIBLE CAUSE**

   The second column labeled “POSSIBLE CAUSE” lists the obvious external possibilities that may contribute to the machine symptom.

3. **RECOMMENDED COURSE OF ACTION**

   This column provides a course of action for the Possible Cause, generally it states to contact your local Lincoln Authorized Field Service Facility.

⚠ CAUTION



If you do not understand or are unable to perform the Recommended Course of Action safely, contact your local Lincoln Authorized Field Service Facility.

Observe all additional safety guidelines detailed throughout this manual.

TROUBLESHOOTING GUIDE

Machine Status Light Indications

Table 13 :Machine Status Light Indications

Indicator state	Indicator Condition	Meaning
Steady Green	Normal operation	Indicates that the system is operating correctly and is ready for use.

Indicator state	Indicator Condition	Meaning
Flashing Green	Initialization	Indicates that the system is initializing after power-up or reset. Normal for first 1-10 seconds after power is turned on, or if the system configuration is changed during operation.
Alternating Green / Red	Fault condition	A system fault has been detected. Individual code digits are flashed in red with a long pause between digits. If more than one code is present, the codes will be separated by green light. Read the error code before the machine is turned off. If occurs, to clear the error try to turn Off the machine, wait for a few seconds, then turn ON again. If the error remains, a maintenance is required. Please contact the nearest authorized technical service center or Lincoln Electric and report the error code read.
Steady Red	Error / No communication	Indicates a system error or loss of communication with a connected device.

Note: If an error occurs, switch the machine OFF, wait a few seconds, and switch ON again. If the error persists, contact an authorized service center and report the displayed error code.

Error Codes

The table below lists basic fault conditions that may occur. For a complete list of fault codes, contact an authorized Lincoln Electric Service Facility.

Table 14 :Error Codes

Error Code	Error Description	Cause	Recommended Course of Action
6	Power source is not connected.	The User Interface cannot seem to communicate with the Power Source.	• Check cable connections between the power source and the user interface.
18	Configuration error	The machine could not properly configure the devices that are attached to it. This configuration problem could be caused by the type of devices that are connected to the machine or a required device that is not connected.	• Consult the Operator's Manual for proper device configuration. • Verify all devices in the system are properly powered.

36	The machine has shut down because it has overheated.	System detected a temperature level beyond the normal system operating limit.	• Be sure process does not exceed duty cycle limit of the machine. • Check the setup for proper air flow around and through the system. • Check that the system has been properly maintained, including removal of accumulated dust and dirt from the intake and outlet louvers. • When the machine has cooled down to a safe level, the interface signals this by flashing two LEDs next to Button or start welding operation by the torch trigger.
46, 54	Output current exceeded	The average value of the output current has been exceeded.	• Verify that the welding circuit does not have a short in it. • Verify stick out, wire size, and gas are correct for the process that is selected. • Decrease the value of the output parameters. • Check the weld circuit for short circuits and other leakage paths that may result in excessive current.
49	Lack of phase	Single phase input operation has been detected.	• Verify all fuses are good. • Verify all three legs of the input power are present at the input contactor. When the contactor closes, be sure all three legs are present on the output side as well (toward the rectifier). • Check the condition of the electrical system.
71	Output power exceeded	The machine detected excessive output power.	• Verify stick out, wire size, and gas are correct for the process that is selected. • Decrease the value of the output parameters. • Check the weld circuit for short circuits and other leakage paths that may result in excessive current.

81	Motor overload, long term.	The wire drive motor has overheated. Check that the electrode slides easily through the gun and cable.	• Remove tight bends from the gun and cable. • Check that the spindle brake is not too tight. • Verify the adequacy of the electrode to the welding process. • Verify a high quality electrode is being used. • Check drive rolls alignment and gears. • Wait for the error to reset and the motor to cool (approximately 1 minute).
92	No coolant flow	There is no coolant flow in the cooler after 3 seconds of welding.	• Make sure there is enough coolant in the tank and that auxiliary power is supplied. • Make sure the pump is working. When the trigger is pulled the pump should run.
262	Incompatible equipment	Required configuration could not be found in the machine. Verify the configuration and the status of the devices connected to the machine.	• Check if the connected power source is in the list of compatible power sources. • Update the system with the latest firmware.
269	Arc was lost or never established	An arc was not established within the amount of time specified by setup parameter P.22 after the trigger was pulled or if the trigger remained pulled after an arc was lost. This error detection is only active in wire welding modes and is intended to prevent an electrically hot wire from being fed in the absence of an arc.	• Adjust P.22 based on weld WFS, run-in WFS, etc. if arc error detection is needed • Set P.22 to OFF if arc error detection is not needed
713	Supply overvoltage	The supply Voltage is too high	• Check the supply voltage level.
714	Supply undervoltage	The supply Voltage is too low	• Check the supply voltage level.

APPENDIX

WIRING DIAGRAM

WIRING DIAGRAM - CODE: 50764

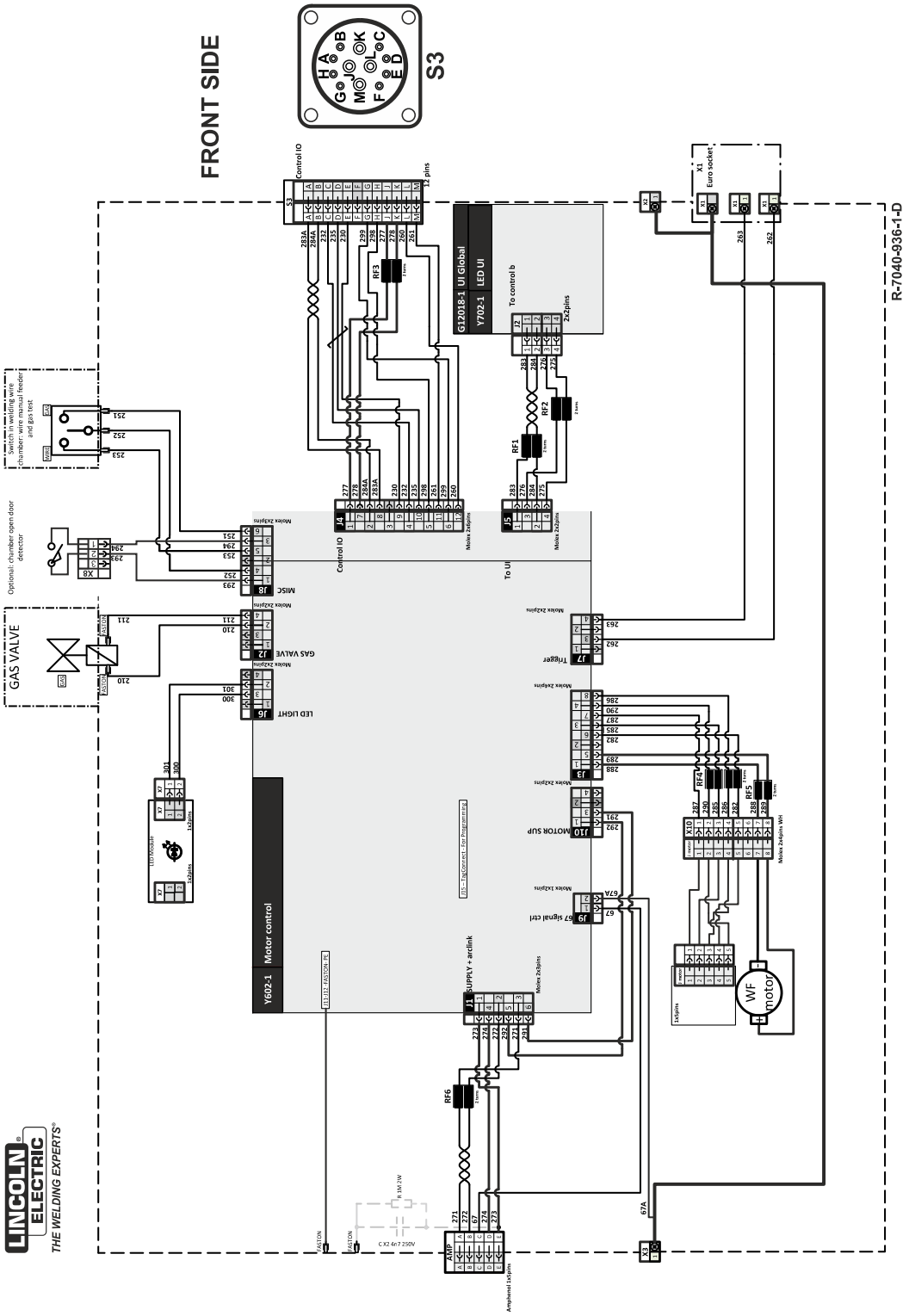

CUSTOMER ASSISTANCE POLICY

CUSTOMER ASSISTANCE POLICY

The business of Lincoln Electric is manufacturing and selling high quality welding equipment, automated welding systems, consumables, and cutting equipment. Our challenge is to meet the needs of our customers, who are experts in their fields, and to exceed their expectations. On occasion, purchasers may ask Lincoln Electric for information or technical information about their use of our products. Our employees respond to inquiries to the best of their ability based on information and specifications provided to them by the customers and the knowledge they may have concerning the application. Our employees, however, are not in a position to verify the information provided or to evaluate the engineering requirements for the particular weldment, or to provide engineering advice in relation to a specific situation or application. Accordingly, Lincoln Electric does not warrant or guarantee or assume any liability with respect to such information or communications. Moreover, the provision of such information or technical information does not create, expand, or alter any warranty on our products. Any express or implied warranty that might arise from the information or technical information, including any implied warranty of merchantability or any warranty of fitness for any customers' particular purpose or any other equivalent or similar warranty is specifically disclaimed.

Lincoln Electric is a responsive manufacturer, but the definition of specifications, and the selection and use of specific products sold by Lincoln Electric is solely within the control of, and remains the sole responsibility of the customer. Many variables beyond the control of Lincoln Electric affect the results obtained in applying these types of fabrication methods and service requirements.

WELD FUME CONTROL EQUIPMENT

The operation of welding fume control equipment is affected by various factors including proper use and positioning of the equipment, maintenance of the equipment and the specific welding procedure and application involved. Worker exposure level should be checked upon installation and periodically thereafter to be certain it is within applicable OSHA PEL and ACGIH TLV limits.

PARTS LIST

Content/Details may be changed or updated without notice. For most current Instruction Manuals, go to PARTS.LINCOLNELECTRIC.COM.