INSTRUCTION MANUAL

SPEEDTEC® 400S / 500S

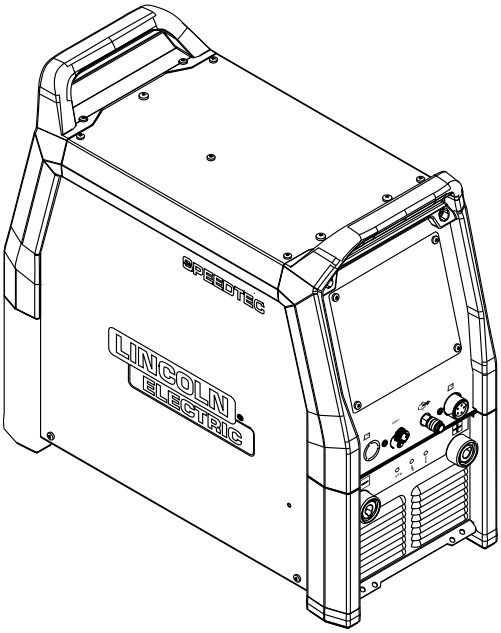

For use with Product/Code Numbers:

50781, 50782

Save for future reference

Date Purchased

Code: (ex: 10859)

Serial: (ex: U1060512345)

IM3221 | Issue Date July - 2026
© Lincoln Global, Inc. All Rights Reserved.

Lincoln Electric Bester Sp. z o.o.
ul. Jana III Sobieskiego 19A, 58-260 Bielawa, Poland
www.lincolnelectric.eu



ISO OERLIKON AG Schweisstechnik
CH-5737 Menziken AG – Tel. +41 (0)62 771 83 05
E-Mail info@iso-oerlikon.ch – www.iso-oerlikon.ch

ONLINE ACCESS TO INSTRUCTION MANUAL

The current version of the instruction manual is available online at the following link:

https://www.lincolnelectric.com/en-GB/Operators-Manuals

It is recommended to use the online version as the most up-to-date source of information.

Contents

ONLINE ACCESS TO INSTRUCTION MANUAL ..... **iii**

INSTALLATION ..... **SECTION A**
- INSTALLATION AND OPERATOR INSTRUCTIONS A-1
- **SPEEDTEC® 400S** TECHNICAL SPECIFICATIONS A-2
- **SPEEDTEC® 500S** TECHNICAL SPECIFICATIONS A-3
- ECO DESIGN INFORMATION FOR EU MACHINE WITH CE MARK A-4
- INTRODUCTION A-6
- EXPLOITATION CONDITIONS A-6
- DUTY CYCLE AND OVERHEATING A-7
- INPUT SUPPLY CONNECTION A-7
- TRANSPORT AND LIFTING A-8

OPERATION ..... **SECTION B**
- MACHINE SYMBOLOGY B-1
- CONTROLS AND OPERATIONAL FEATURES B-4
- WELDING CABLES CONNECTION B-6
- WATER COOLER CONNECTION B-7
- CONNECTION TO THE ETHERNET NETWORK B-8

CONNECTION OVERVIEW ..... **SECTION C**
- CONNECTION OVERVIEW C-2

ACCESSORIES AND OPTIONS ..... **SECTION D**
- ACCESSORIES AND OPTIONS D-1

MAINTENANCE ..... **SECTION E**
- MAINTENANCE E-1

TROUBLESHOOTING ..... **SECTION F**
- HOW TO USE TROUBLESHOOTING GUIDE F-1
- TROUBLESHOOTING GUIDE F-1

APPENDIX
- WIRING DIAGRAM

CUSTOMER ASSISTANCE POLICY

SAFETY INFORMATION

SAFETY DEPENDS ON YOU

Lincoln welding, cutting, and heating equipment is designed and built with safety in mind. However, your overall safety can be increased by proper installation and thoughtful operation on your part. DO NOT INSTALL, OPERATE OR REPAIR THIS EQUIPMENT WITHOUT READING THIS MANUAL AND THE SAFETY PRECAUTIONS CONTAINED THROUGHOUT. And, most importantly, think before you act and be careful.

⚠ DANGER

This statement indicates an imminently hazardous situation which, if not avoided, will result in death or serious injury.

⚠ WARNING

This statement indicates a potentially hazardous situation which, if not avoided, could result in death or serious injury.

⚠ CAUTION

This statement indicates a potentially hazardous situation which, if not avoided, could result in minor or moderate injury.

Notice: This statement indicates the possibility of damage to equipment if the potential risk is not avoided.

PLEASE EXAMINE CARTON AND EQUIPMENT FOR DAMAGE IMMEDIATELY

When this equipment is shipped, title passes to the purchaser upon receipt by the carrier. Consequently, claims for material damaged in shipment must be made by the purchaser against the transportation company at the time the shipment is received.

KEEP YOUR HEAD OUT OF THE FUMES



- **DON'T** get too close to the weld. Use corrective lenses if necessary to stay a reasonable distance away from the weld.
- **USE ENOUGH VENTILATION** or exhaust at the weld, or both, to keep the fumes and gases from your breathing zone and the general area.
- **IN A LARGE ROOM OR OUTDOORS** , natural ventilation may be adequate if you keep your head out of the fumes.
- **USE NATURAL DRAFTS** or fans to keep the fumes away from your face.
- **READ** and obey the Safety Data Sheet (SDS) and the warning label that appears on all containers of welding materials.

If you develop unusual symptoms, see your supervisor. Perhaps the welding atmosphere and ventilation system should be checked.

WEAR CORRECT EYE, EAR AND BODY PROTECTION



- **PROTECT** your eyes and face with properly fitted and with proper grade of filter plate (See ANSI Z49.1).
- **PROTECT** your body from welding spatter and arc flash with protective clothing including woolen clothing, flame-proof apron and gloves, leather leggings, and high boots.
- **PROTECT** others from spatter, flash, and glare with protective screens or barriers.
- **PROTECT** your eyes and face with welding helmet
- **IN SOME AREAS**, protection from noise may be appropriate.
- **BE SURE** protective equipment is in good condition.



- **AT ALL TIMES**, wear safety glasses in work area.

- **DO NOT WELD, CUT, OR HEAT** containers or materials which previously had been in contact with hazardous substances unless they are properly cleaned. This is extremely dangerous.

- **DO NOT WELD, CUT, OR HEAT** painted or plated parts unless special precautions with ventilation have been taken. They can release highly toxic fumes or gases.
- **PROTECT** compressed gas cylinders from excessive heat, mechanical shocks, and arcs; fasten cylinders so they cannot fall.
- **BE SURE** cylinders are never grounded or part of an electrical circuit.
- **REMOVE** all potential fire hazards from welding area.



- **ALWAYS HAVE FIRE FIGHTING EQUIPMENT READY FOR IMMEDIATE USE AND KNOW HOW TO USE IT.**

CALIFORNIA PROPOSITION 65 WARNINGS

⚠ WARNING



Breathing diesel engine exhaust exposes you to chemicals known to the State of California to cause cancer and birth defects, or other reproductive harm.

Always start and operate the engine in a well-ventilated area.

If in an exposed area, vent the exhaust to the outside.

Do not modify or tamper with the exhaust system.

Do not idle the engine except as necessary.

⚠ WARNING



This product, when used for welding or cutting, produces fumes or gases which contain chemicals known to the State of California to cause birth defects and, in some cases, cancer. (California Health & Safety Code § 25249.5 et seq.)

For more information go to https://www.p65warnings.ca.gov

ARC WELDING CAN BE HAZARDOUS

PROTECT YOURSELF AND OTHERS FROM POSSIBLE SERIOUS INJURY OR DEATH. KEEP CHILDREN AWAY. PACEMAKER WEARERS SHOULD CONSULT WITH THEIR DOCTOR BEFORE OPERATING.

Read and understand the following safety highlights. For additional safety information, it is strongly recommended that you purchase a copy of "Safety in Welding & Cutting - ANSI Standard Z49.1" from the American Welding Society, P.O. Box 351040, Miami, Florida 33135 or CSA Standard W117.2. A Free copy of "Arc Welding Safety" booklet E205 is available from the Lincoln Electric Company, 22801 St. Clair Avenue, Cleveland, Ohio 44117-1199.

BE SURE THAT ALL INSTALLATION, OPERATION, MAINTENANCE AND REPAIR PROCEDURES ARE PERFORMED ONLY BY QUALIFIED INDIVIDUALS.

FOR ENGINE POWERED EQUIPMENT



- Turn the engine off before troubleshooting and maintenance work unless the maintenance work requires it to be running.



- Do not add the fuel near an open flame welding arc or when the engine is running. Stop the engine and allow it to cool before refueling to prevent spilled fuel from vaporizing on contact with hot engine parts and igniting. Do not spill fuel when filling tank. If fuel is spilled, wipe it up and do not start engine until fumes have been eliminated.



- Keep all equipment safety guards, covers and devices in position and in good repair. Keep hands, hair, clothing and tools away from V-belts, gears, fans and all other moving parts when starting, operating or repairing equipment.

- In some cases it may be necessary to remove safety guards to perform required maintenance. **REMOVE GUARDS ONLY** when necessary and replace them when the maintenance requiring their removal is complete. Always use the greatest care when working near moving parts.
- **DO NOT** put your hands near the engine fan. Do not attempt to override the governor or idler by pushing on the throttle control rods while the engine is running.
- To prevent accidentally starting gasoline engines while turning the engine or welding generator during maintenance work, disconnect the spark plug wires, distributor cap or magneto wire as appropriate.



- To avoid scalding, do not remove the radiator pressure cap when the engine is hot.



- Generator exhaust contains carbon monoxide. This is a poison you cannot see or smell.
- Using a generator indoors **CAN KILL YOU IN MINUTES**.
- **NEVER** use inside a home or garage, EVEN IF doors and windows are open.



- **ONLY** use **OUTSIDE** and far away from windows, doors and vents.
- Avoid other generator hazards. **READ MANUAL BEFORE USE**.

ELECTRIC AND MAGNETIC FIELDS MAY BE DANGEROUS



- Electric current flowing through any conductor causes localized Electric and Magnetic Fields (EMF). Welding and heating current creates EMF fields around cables and equipment.
- EMF fields may interfere with some pacemakers, and welders having a pacemaker should consult their physician before welding.
- Exposure to EMF fields in welding may have other health effects which are now not known.

All welders should use the following procedures in order to minimize exposure to EMF fields from the welding circuit:

- Route the electrode and work cables together - Secure them with tape when possible.
- Never coil the electrode lead around your body.
- Do not place your body between the electrode and work cables. If the electrode cable is on your right side, the work cable should also be on your right side.
- Connect the work cable to the workpiece as close as possible to the area being welded.
- Do not work next to welding power source.

ELECTRIC SHOCK CAN KILL



- The electrode and work (or ground) circuits are electrically “hot” when the welder is on. Do not touch these “hot” parts with your bare skin or wet clothing. Wear dry, hole-free gloves to insulate hands.
- Insulate yourself from work and ground using dry insulation. Make certain the insulation is large enough to cover your full area of physical contact with work and ground.

In addition to the normal safety precautions, if welding must be performed under electrically hazardous conditions (in damp locations or while wearing wet clothing; on metal structures such as floors, gratings or scaffolds; when in cramped positions such as sitting, kneeling or lying, if there is a high risk of unavoidable or accidental contact with the workpiece or ground) use the following equipment:

- Semiautomatic DC Constant Voltage (Wire) Welder.
- DC Manual (Stick) Welder.
- AC Welder with Reduced Voltage Control.
- In semiautomatic or automatic wire welding, the electrode, electrode reel, welding head, nozzle or semiautomatic welding gun are also electrically “hot”.
- Always be sure the work cable makes a good electrical connection with the metal being welded. The connection should be as close as possible to the area being welded.
- Ground the work or metal to be welded to a good electrical (earth) ground.
- Maintain the electrode holder, work clamp, welding cable and welding machine in good, safe operating condition. Replace damaged insulation.
- Never dip the electrode in water for cooling.

- Never simultaneously touch electrically “hot” parts of electrode holders connected to two welders because voltage between the two can be the total of the open circuit voltage of both welders.
- When working above floor level, use a safety belt to protect yourself from a fall should you get a shock.
- **Also see** WELDING AND CUTTING SPARKS CAN CAUSE FIRE OR EXPLOSION **and** FOR ELECTRICALLY POWERED EQUIPMENT

ARC RAYS CAN BURN



- Use a shield with the proper filter and cover plates to protect your eyes from sparks and the rays of the arc when welding or observing open arc welding. Headshield and filter lens should conform to ANSI Z87.1 standards.
- Use suitable clothing made from durable flame-resistant material to protect your skin and that of your helpers from the arc rays.
- Protect other nearby personnel with suitable, non-flammable screening and/or warn them not to watch the arc nor expose themselves to the arc rays or to hot spatter or metal.

FUMES AND GASES CAN BE DANGEROUS



Welding may produce fumes and gases hazardous to health. Avoid breathing these fumes and gases. When welding, keep your head out of the fume. Use enough ventilation and/or exhaust at the arc to keep fumes and gases away from the breathing zone.

- **When welding hardfacing (see instructions on container or SDS) or on lead or cadmium plated steel and other metals or coatings which produce highly toxic fumes, keep exposure as low as possible and within applicable OSHA PEL and ACGIH TLV limits using local exhaust or mechanical ventilation unless exposure assessments indicate otherwise. In confined spaces or in some circumstances, outdoors, a respirator may also be required. Additional precautions are also required when welding on galvanized steel.**
- The operation of welding fume control equipment is affected by various factors including proper use and positioning of the equipment, maintenance of the equipment and the specific welding procedure and application involved. Worker exposure level should be checked upon installation and periodically thereafter to be certain it is within applicable OSHA PEL and ACGIH TLV limits.
- Do not weld in locations near chlorinated hydrocarbon vapors coming from degreasing, cleaning or spraying operations. The heat and rays of the arc can react with solvent vapors to form phosgene, a highly toxic gas, and other irritating products.
- Shielding gases used for welding can displace air and cause injury or death. Always use enough ventilation, especially in confined areas, to insure breathing air is safe.
- Read and understand the manufacturer’s instructions for this equipment and the consumables to be used, including the Safety Data Sheet (SDS) and follow your employer’s safety practices. SDS forms are available from your welding distributor or from the manufacturer.
- Also see FOR ENGINE POWERED EQUIPMENT

WELDING AND CUTTING SPARKS CAN CAUSE FIRE OR EXPLOSION



- Remove fire hazards from the welding area. If this is not possible, cover them to prevent the welding sparks from starting a fire. Remember that welding sparks and hot materials from welding can easily go through small cracks and openings to adjacent areas. Avoid welding near hydraulic lines. Have a fire extinguisher readily available.
- Where compressed gases are to be used at the job site, special precautions should be used to prevent hazardous situations. Refer to **“Safety in Welding and Cutting” (ANSI Standard Z49.1)** and the operating information for the equipment being used.

- When not welding, make certain no part of the electrode circuit is touching the work or ground. Accidental contact can cause overheating and create a fire hazard.
- Do not heat, cut or weld tanks, drums or containers until the proper steps have been taken to ensure that such procedures will not cause flammable or toxic vapors from substances inside. They can cause an explosion even though they have been “cleaned”. For information, purchase “Recommended Safe Practices for the Preparation for Welding and Cutting of Containers and Piping That Have Held Hazardous Substances”, **AWS F4.1** from the American Welding Society.
- Vent hollow castings or containers before heating, cutting or welding. They may explode.
- Sparks and spatter are thrown from the welding arc. Wear oil free protective garments such as leather gloves, heavy shirt, cuff-less trousers, high shoes and a cap over your hair. Wear ear plugs when welding out of position or in confined places. Always wear safety glasses with side shields when in a welding area.
- Connect the work cable to the work as close to the welding area as practical. Work cables connected to the building framework or other locations away from the welding area increase the possibility of the welding current passing through lifting chains, crane cables or other alternate circuits. This can create fire hazards or overheat lifting chains or cables until they fail.
- **Read and follow NFPA 51B** “Standard for Fire Prevention During Welding, Cutting and Other Hot Work”, available from NFPA, 1 Batterymarch Park, PO box 9101, Quincy, MA 022690-9101.
- **DO NOT** use a welding power source for pipe thawing.

CYLINDER MAY EXPLODE IF DAMAGED



- Use only compressed gas cylinders containing the correct shielding gas for the process used and properly operating regulators designed for the gas and pressure used. All hoses, fittings, etc. should be suitable for the application and maintained in good condition.
- Always keep cylinders in an upright position securely chained to an undercarriage or fixed support.

Cylinders should be located:

- Away from areas where they may be struck or subjected to physical damage.
- A safe distance from arc welding or cutting operations and any other source of heat, sparks, or flame.
- Never allow the electrode, electrode holder or any other electrically “hot” parts to touch a cylinder.
- Keep your head and face away from the cylinder valve outlet when opening the cylinder valve.
- Valve protection caps should always be in place and hand tight except when the cylinder is in use or connected for use.
- Read and follow the instructions on compressed gas cylinders, associated equipment, and CGA publication P-l, “Precautions for Safe Handling of Compressed Gases in Cylinders,” available from the Compressed Gas Association, 14501 George Carter Way Chantilly, VA 20151.

FOR ELECTRICALLY POWERED EQUIPMENT



- Turn off input power using the disconnect switch at the fuse box before working on the equipment.
- Install equipment in accordance with the U.S. National Electrical Code, all local codes and the manufacturer’s recommendations.
- Ground the equipment in accordance with the U.S. National Electrical Code and the manufacturer’s recommendations.

BATTERY HANDLING, STORAGE, AND DISPOSAL



Batteries can be flammable substances such as lithium or other organic solvents, which may result in overheating, rupture, or combustion. Failure to follow the battery manufactures instructions may result in fire, personal injury, and damage to property if used improperly.

- DO NOT short circuit, disassemble, deform, or heat batteries.
- DO NOT attempt to recharge batteries unless they are specifically marked as "rechargeable".
- DO NOT use or charge the battery if it appears to be leaking, deformed or damaged in any way.
- Store in a cool location. Keep batteries away from direct sunlight, high temperature, and high humidity.
- Immediately discontinue use of the battery if, while using, charging, or storing the battery, the battery emits an unusual smell, feels hot, changes color, changes shape, or appears abnormal in any other way.
- Keep batteries out of reach of children, should a child swallow a battery, consult a physician immediately.
- Recycle or dispose of batteries in accordance with local and federal laws.

FOR LASER EMITTING EQUIPMENT



- Hazardous Class 4 (IV) laser products emit invisible, infrared laser radiation which can permanently damage the eye's retina and/or cornea, burn skin, and pose a fire risk. End users shall assign a qualified Laser Safety Officer (LSO) who has the certifications required by applicable law/standards, have a documented Laser Safety Program and have a Laser Controlled Area (LCA) that confirms to ANSI Z136.1 & Z136.9.
- Do not operate laser before end user's LSO has completed a risk assessment and all the prescribed Risk Mitigations measures have been fully implemented. Ensure the laser is operated/ demonstrated safely by trained personnel and that the environment surrounding the laser welding cell or laser-controlled area is safe for people nearby when the laser is in operation.
- Never point the laser at yourself or others. Never look directly into a laser aperture, even if wearing full eye protection.
- All persons inside LCA must wear proper PPE to avoid eye or skin exposure to laser radiation. The end user's LSO shall select proper PPE including, but not limited to, heat-resistant gloves, flame-resistant clothing, laser safety eye wear and laser-safe helmets that conform to ANSI Z136.1 Optical Density requirements for the wavelength and output power of the laser in use. Standard safety glasses and welding helmets DO NOT provide adequate protection from laser beam hazards. Always inspect PPE for damage or improper fit before use.
- Only qualified persons shall install, operate or service this unit per ANSI Z136.1 standards and your LSO's instruction. Read and follow all labels and manuals before installing, operating, or servicing hand held any laser welding equipment.
- Do not operate outside of a LCA, or if the laser protective housing is modified or damaged, or if safety interlocks have been bypassed or otherwise defeated. Inspect all equipment and LCA for damage or tampering prior to use.
- Reflected beams from the laser can damage eyes and skin and can pose a fire risk. Prior to use, the LCA should be assessed by the LSO to understand the surfaces where hazardous reflected beams can exist. Never position yourself or flammable material in the anticipated laser beam path and take extra precautions when working on reflective materials like aluminum and stainless steel.
- Follow all standards, individual facility or building regulations, and national, state, and local codes.

DEALER LOCATOR & PRODUCT REGISTRATION

Register your machine:

https://www.lincolnelectric.com/register

Authorized Service and Distributor Locator:

https://www.lincolnelectric.com/locator

ADDITIONAL SAFETY INFORMATION

Refer to http://www.lincolnelectric.com/safety for additional safety information

WEEE



Do not dispose of electrical equipment together with normal waste! In observance of European Directive 2012/19/EC on Waste Electrical and Electronic Equipment (WEEE) and its implementation in accordance with national law, electrical equipment that has reached the end of its life must be collected separately and returned to an environmentally compatible recycling facility. As the owner of the equipment, you should get information on approved collection systems from our local representative.

By applying this European Directive you will protect the environment and human health!

ELECTROMAGNETIC COMPATIBILITY (EMC)

This machine has been designed in accordance with all relevant directives and standards. However, it may still generate electromagnetic disturbances that can affect other systems like telecommunications (telephone, radio, and television) or other safety systems. These disturbances can cause safety problems in the affected systems. Read and understand this section to eliminate or reduce the amount of electromagnetic disturbance generated by this machine.

⚠ WARNING



This machine has been designed to operate in an industrial area. To operate in a domestic area it is necessary to observe particular precautions to eliminate possible electromagnetic disturbances. The operator must install and operate this equipment as described in this manual. If any electromagnetic disturbances are detected the operator must put in place corrective actions to eliminate these disturbances with, if necessary, assistance from Lincoln Electric.

⚠ WARNING



Provided that the public low voltage system impedance at the point of common coupling is lower than:

21 mΩ for the **SPEEDTEC® 500S**.

This equipment is compliant with IEC 61000-3-11 and IEC 61000-3-12 and can be connected to public low voltage systems. It is the responsibility of the installer or user of the equipment to ensure, by consultation with the distribution network operator if necessary, that the system impedance complies with the impedance restrictions.

⚠ WARNING



SPEEDTEC® 400S, This equipment does not comply with IEC 61000-3-12. If it is connected to a public low voltage system, it is the responsibility of the installer or user of the equipment to ensure, by consultation with the distribution network operator, that the equipment may be connected.

Before installing the machine, the operator must check the work area for any devices that may malfunction because of electromagnetic disturbances. Consider the following.

- Input and output cables, control cables, and telephone cables that are in or adjacent to the work area and the machine.
- Radio and/or television transmitters and receivers. Computers or computer controlled equipment.
- Safety and control equipment for industrial processes. Equipment for calibration and measurement.
- Personal medical devices like pacemakers and hearing aids.
- Check the electromagnetic immunity for equipment operating in or near the work area. The operator must be sure that all equipment in the area is compatible. This may require additional protection measures.
- The dimensions of the work area to consider will depend on the construction of the area and other activities that are taking place.

Consider the following guidelines to reduce electromagnetic emissions from the machine.

- Connect the machine to the input supply according to this manual. If disturbances occur if may be necessary to take additional precautions such as filtering the input supply.
- The output cables should be as short as possible and positioned together as close as possible to each other. If possible connect the work piece to ground in order to reduce the electromagnetic emissions. The operator must check that connecting the work piece to ground does not cause problems or unsafe operating conditions for personnel and equipment.
- Shielding of cables in the work area can reduce electromagnetic emissions. This may be necessary for special applications.

⚠ WARNING



EMC classification of this product is class A in accordance with electromagnetic compatibility standard EN 60974-10 which means that the product is designed to be used in an industrial environment only.

⚠ WARNING



The Class A equipment is not intended for use in residential locations where the electrical power is provided by the public low-voltage supply system. There can be potential difficulties in ensuring electromagnetic compatibility in those locations, due to conducted as well as radio-frequency disturbances.

INSTALLATION

INSTALLATION AND OPERATOR INSTRUCTIONS

⚠ WARNING



Read this entire section before installing or operating the machine.

Read and understand this instruction manual before installing, operating, or servicing this equipment.

Keep this instruction manual available for future reference.

⚠ WARNING



Do not operate with covers removed.

Do not operate if cables are wet or immersed in water.

Do not touch electrically “hot” parts inside the machine.

Have qualified personnel do the installation, maintenance and troubleshooting work.

⚠ CAUTION



Risk from electrical current!

If welding is carried out alternately using different methods and if a welding torch and an electrode holder remain connected to the machine, the open-circuit/welding voltage is applied simultaneously on all cables.

The torch and the electrode holder should therefore always be placed on an insulated surface before starting work and during breaks.

Do not touch two welding guns, two electrode holders, or a welding gun and an electrode holder at the same time.

SPEEDTEC® 400S TECHNICAL SPECIFICATIONS

NAME	INDEX			
SPEEDTEC® 400S	**K14457-1**			
INPUT				
Input Voltage U_1	400V±10% 3-phase			
Rated Cycle	100%			
Input Apparent Power at Maximum Rated Cycle	20kVA			
Input Current I_{1max}	28A			
Power Factor PF	0.83			
EMC Class	A			
Frequency	50/60Hz			
RATED OUTPUT AT 40°C				
Process	GMAW	FCAW	SMAW	GTAW
Input Voltage	400V			
Open Circuit Voltage (peak) U_0	65Vdc			
Rated Cycle (based on a 10 min. period)	100%	100%	100%	100%
Output Current I_2	420A	420A	420A	420A
Output Voltage U_2	35Vdc	35Vdc	36.8Vdc	26.8Vdc
WELDING CURRENT RANGE				
Input Voltage	400V			
GMAW	20A ÷ 420A			
FCAW	20A ÷ 420A			
SMAW	15A ÷ 420A			
GTAW	15A ÷ 420A			
WELDING VOLTAGE REGULATION RANGE				
GMAW	10V ÷ 45V			
FCAW	10V ÷ 45V			
RECOMMENDED SUPPLY NETWORK CABLE AND FUSE SIZES				
Supply network cable	$4x4mm^2$			
Fuse Type gR or Circuit Breaker Type Z	32A			
DIMENSIONS AND WEIGHT				
Height	580mm			
Width	295mm			
Length (case only, without torch)	630mm			
Weight	39 kg			
OTHERS				
Protection Rating	IP23			
Maximum Gas Pressure	0.5MPa (5 bar)			
Operating Temperature	from -10°C to +40°C			
Storage Temperature	from -25°C to +55°C			
Operating Humidity (t=20°C)	≤ 90 %			

SPEEDTEC® 500S TECHNICAL SPECIFICATIONS

NAME				INDEX			
SPEEDTEC® 500S				K14458-1			
INPUT							
Input Voltage U_1	400V±10% 3-phase						
Rated Cycle	100%			60%			
Input Power at Rated Cycle	20kVA			25kVA			
Input Current I_{1max}	28A			35A			
Power Factor PF	0.83			0.88			
EMC Class	A						
Frequency	50/60Hz						
RATED OUTPUT AT 40°C							
Process	GMAW		FCAW		SMAW		GTAW	
Input Voltage	400V							
Open Circuit Voltage (peak) U_0	65Vdc							
Rated Cycle (based on a 10 min. period)	100%	60%	100%	60%	100%	60%	100%	60%
Output Current I_2	420A	500A	420A	500A	420A	500A	420A	500A
Output Voltage U_2	35Vdc	39Vdc	35Vdc	39Vdc	36.8Vdc	40Vdc	26.8Vdc	30Vdc
WELDING CURRENT RANGE								
Input Voltage	400V							
GMAW	20A ÷ 500A							
FCAW	20A ÷ 500A							
SMAW	15A ÷ 500A							
GTAW	15A ÷ 500A							
WELDING VOLTAGE REGULATION RANGE								
GMAW	10V ÷ 45V							
FCAW	10V ÷ 45V							
RECOMMENDED SUPPLY NETWORK CABLE AND FUSE SIZES								
Supply network cable	$4x4mm^2$							
Fuse Type gR or Circuit Breaker Type Z	32A							
DIMENSIONS AND WEIGHT								
Height	580mm							
Width	295mm							
Length (case only, without torch)	630mm							
Weight	39 kg							
OTHERS								
Protection Rating	IP23							
Maximum Gas Pressure	0.5MPa (5 bar)							
Operating Temperature	from -10°C to +40°C							
Storage Temperature	from -25°C to +55°C							
Operating Humidity (t=20°C)	≤ 90 %							

ECO DESIGN INFORMATION FOR EU MACHINE WITH CE MARK

The equipment has been designed in order to be compliant with the Directive 2009/125/EC and the Regulation 2019/1784/EU.

Table 1 :Efficiency and idle power consumption:

Index	Name	Efficiency when max power consumption / Idle power consumption	Equivalent model
K14457-1	**SPEEDTEC® 400S**	91% / 31W*	No equivalent model
K14458-1	**SPEEDTEC® 500S**	91% / 31W*	No equivalent model

Note: * In shut down mode, machine consumes 6 W.

Table 2 :Idle state occurs under the condition specified in below table:

IDLE STATE	
	Condition
MIG mode	X
TIG mode	
STICK mode	
After 10 minutes of non-working	
Fan off	X
Standby mode	X

The value of efficiency and consumption in idle state have been measured by method and conditions defined in the product standard EN 60974-1:20XX.

For machines manufactured for the European market, the year of manufacture is included in the serial number on the rating plate.

Manufacturer's name, product name, code number, product number, serial number and date of production can be read from rating plate.

The following information is provided on the rating plate:

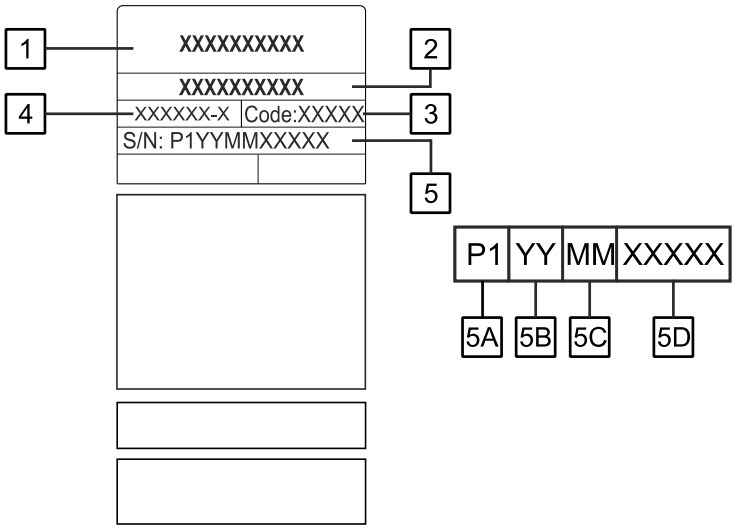

1 Manufacturer name and address
2 Product name
3 Code number
4 Product number
5 Serial number
  5A Country of production
  5B Year of production
  5C Month of production
  5D Unique production number - progressive number different for each machine

Typical gas usage for MIG/MAG equipment

Material type	Wire diameter [mm]	DC electrode positive		Wire Feeding [mm]	Shielding Gas	Gas flow [l/min]
		Current [A]	Voltage [V]			
Carbon, low alloy steel	0.9 ÷ 1,1	95 ÷ 200	18 ÷ 22	3.5 – 6.5	Ar 75%, CO_2 25%	12
Aluminum	0.8 ÷ 1.6	90 ÷ 240	18 ÷ 26	5.5 – 9.5	Argon	14 ÷ 19
Austenitic stainless steel	0.8 ÷ 1.6	85 ÷ 300	21 ÷ 28	3 - 7	Ar 98%, O_2 2% / He 90%, Ar 7.5% CO_2 2.5%	14 ÷ 16
Copper alloy	0.9 ÷ 1.6	175 ÷ 385	23 ÷ 26	6 - 11	Argon	12 ÷ 16
Magnesium	1.6 ÷ 2.4	70 ÷ 335	16 ÷ 26	4 - 15	Argon	24 ÷ 28

GTAW (TIG) process

In TIG welding process, gas usage depends on cross-sectional area of the nozzle. For commonly used torches:

Helium: 14-24 l/min.

Argon: 7-16 l/min.

Note: Excessive flow rates causes turbulence in the gas stream which may aspirate atmospheric contamination into the welding pool.

Note: A cross wind or draft moving can disrupt the shielding gas coverage, in the interest of saving of protective gas use screen to block air flow



End of life

At end of life of product, it has to be disposal for recycling in accordance with Directive 2012/19/EU (WEEE), information about the dismantling of product and Critical Raw Material (CRM) present in the product, can be found at https://www.lincolnelectric.com/en-GB/Safety-Document-Search/Critical-Raw-Materials

INTRODUCTION

The **SPEEDTEC®400S/500S** are multi-process inverter power sources designed for use with digital wire feeders, including:

- **Power Feed® 52**
- **Power Feed® 56**

Communication between the power source and the wire feeder is provided via the ArcLink® protocol.

When used with a compatible wire feeder, the power source supports the following welding processes:

- GMAW (MIG/MAG)
- FCAW-GS / FCAW-SS
- SMAW (MMA)
- GTAW (lift TIG)
- CAG (gouging)

The **SPEEDTEC®400S/500S** are designed for operation with the **Cool Arc® 60s** cooler.

The complete package includes:

- Power source
- USB memory with Operator's Manual
- Easy Start
- Fuse 0.5A/400V; (5x20)mm, 1EA
- Fuse 1A/400V; (5x20)mm, 1EA
- Gas quick connector, 1EA
- Hose clamp, 1EA

Recommended equipment is listed in the ACCESSORIES AND OPTIONS on page D-1 section and is available for separate purchase.

EXPLOITATION CONDITIONS

This machine can operate in harsh environments. However, it is important to use the following simple preventive measures that will ensure its long life and reliable operation:

- Do not place or operate this machine on a surface with an incline higher than 15° from horizontal.
- Do not use this machine for pipe thawing.
- This machine must be located where there is free circulation of clean air without restrictions for air movement. Do not cover the machine with paper, cloth or rags when switched on.
- Dirt and dust that can be drawn into the machine should be kept away from the item.
- This machine has a protection rating of IP23. Keep it dry when possible and do not place it on a wet ground or in puddles.
- Locate the machine away from a radio controlled machinery. Normal operation may adversely affect the operation of a nearby radio controlled machinery, which may result in injury or equipment damage. Read the section on electromagnetic compatibility in this manual.
- Do not operate in areas with an ambient temperature greater than 40°C.

DUTY CYCLE AND OVERHEATING

The duty cycle of a welding machine is the percentage of time in a 10 minute cycle at which the user can operate the machine at rated welding current.

Example: 60% duty cycle:

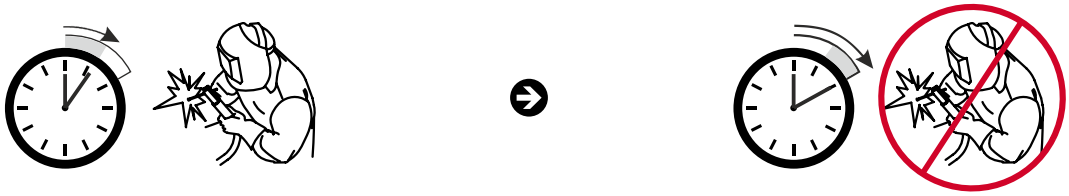

Welding for 6 minutes

Break for 4 minutes

Excessive extension of the duty cycle will cause the thermal protection circuit to activate.

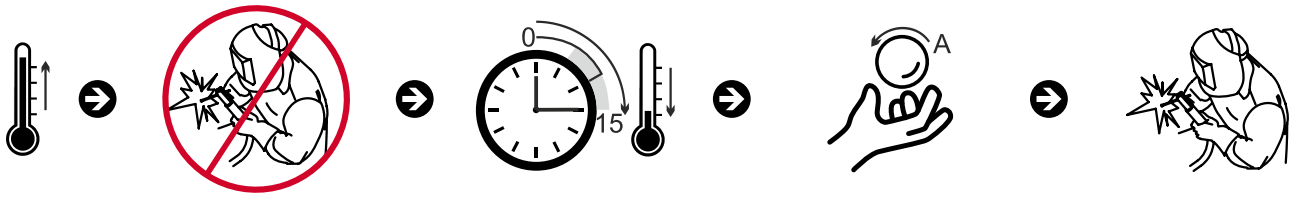

Minutes

or decrease Duty Cycle

INPUT SUPPLY CONNECTION

⚠ WARNING

Only a qualified electrician can connect the welding machine to the supply network. Installation must be made in accordance with the appropriate National Electrical Code and local regulations.

Check the input voltage, phase and frequency supplied to this machine before turning it on. Verify the connection of ground wires from the machine to the input source. The welding machine **SPEEDTEC®400S/ 500S** must be connected to a correctly installed plug-in socket with an earth pin.

For more information about input supply refer to the technical specification section of this manual and to the rating plate of the machine.

Make sure that the amount of mains power available from the input supply is adequate for normal operation of the machine. The necessary delayed fuse or circuit breaker and cable sizes are indicated in the technical specification section of this manual.

Note: The welding machine can be supplied from a power generator of output power at least 30% larger than input power of the welding machine.

⚠ CAUTION



When powering the machine from a generator be sure to turn off welder first, before generator is shut down, in order to prevent damage to welder!

TRANSPORT AND LIFTING

Note: During transportation and storage, the ambient temperature must be within the recommended range (refer to TECHNICAL SPECIFICATIONS section).

⚠ CAUTION



To prevent freeze damage and coolant leakage, drain the coolant from the cooler reservoir before transport.

⚠ WARNING



Observe all safety precautions when lifting the equipment.

Follow all applicable local regulations.

⚠ WARNING



Falling equipment can cause injury and damage to the unit.

Preparation to transport and lifting

- Switch off the equipment and disconnect it from the power supply.
- Drain the coolant completely.
- Remove the wire feeder, wire spool, gas cylinder, and all loose components before transport.

After transport and lifting

- Inspect the equipment for visible damage before commissioning.
- Do not operate the equipment if it is damaged.
- Have all repairs performed by qualified personnel before use.

Transport and lifting requirements

- Use only approved lifting equipment with sufficient rated capacity.

- Inspect all lifting equipment before use.
- Ensure that the equipment is stable and properly secured during transport.
- Ensure that the load is stable and evenly distributed before lifting.
- Use a spreader beam (traverse) and appropriately rated lifting slings when lifting with a crane.
- Attach lifting chains or straps only to designated lifting points.
- Use the dedicated lifting eye.
- Keep personnel clear of the equipment during lifting operations.
- Perform lifting operations only by trained and authorized personnel.

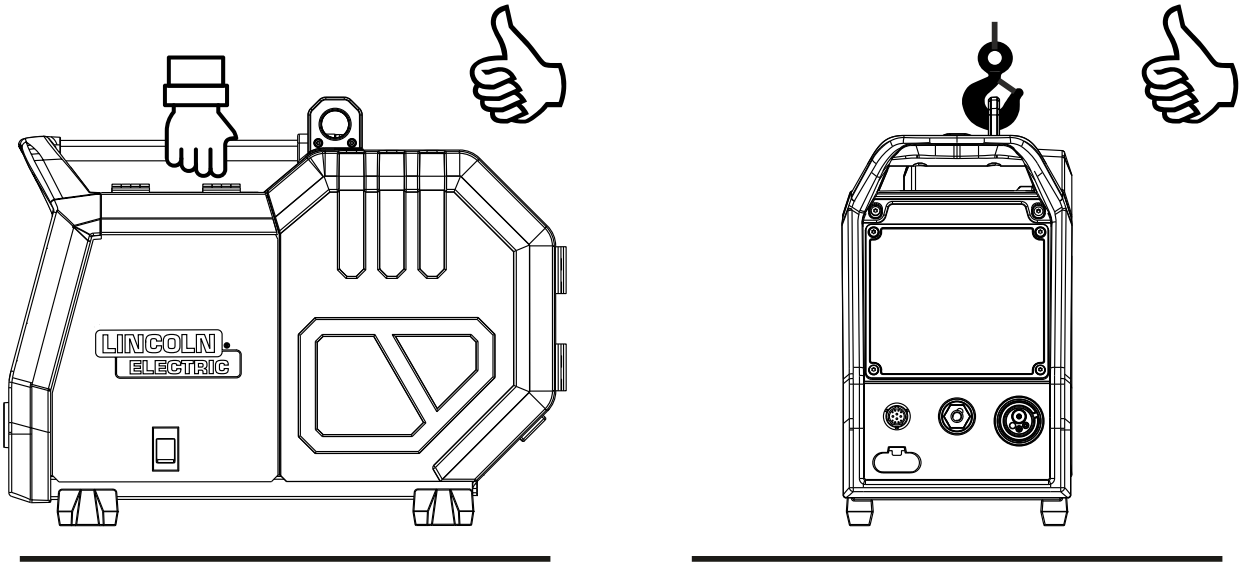

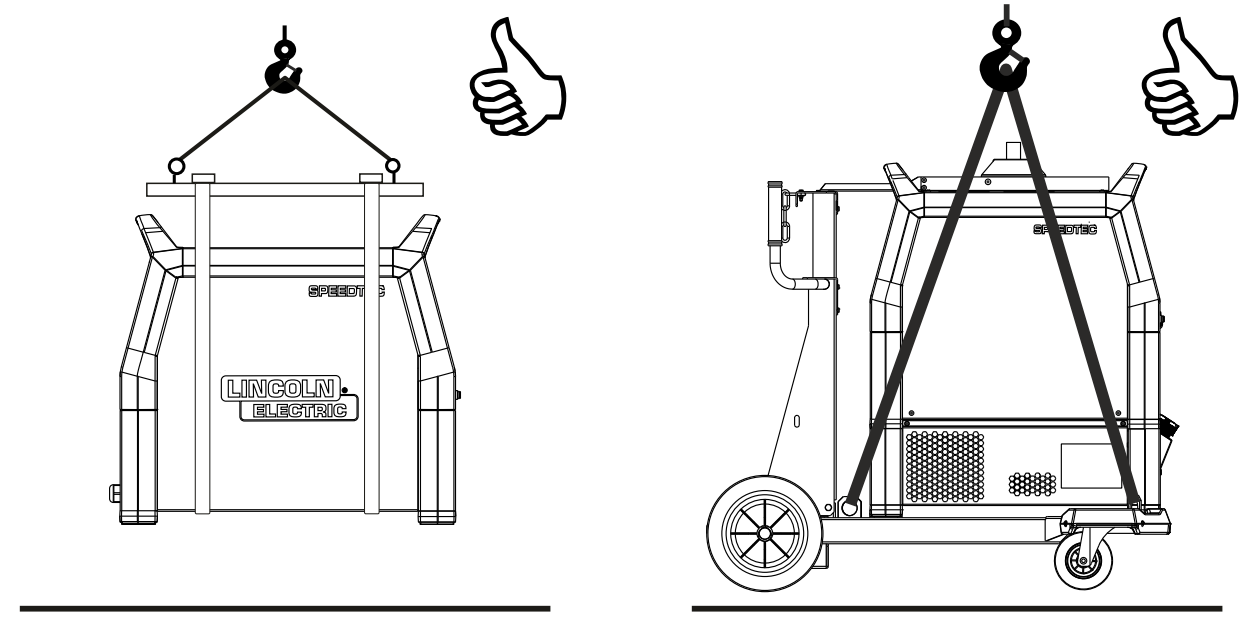

Prohibited actions

- Do not lift any equipment using transport handles.
- Do not use handles for lifting by crane or hoist.

- Do not use unauthorized lifting points.
- Do not lift equipment that is not properly secured.
- Do not lift equipment with loose components attached.
- Do not lift the system if a gas cylinder or wire feeder is installed on the transport cart.
- Do not stand under or near suspended loads.
- Do not attempt to lift the equipment unless the load is stable and balanced.

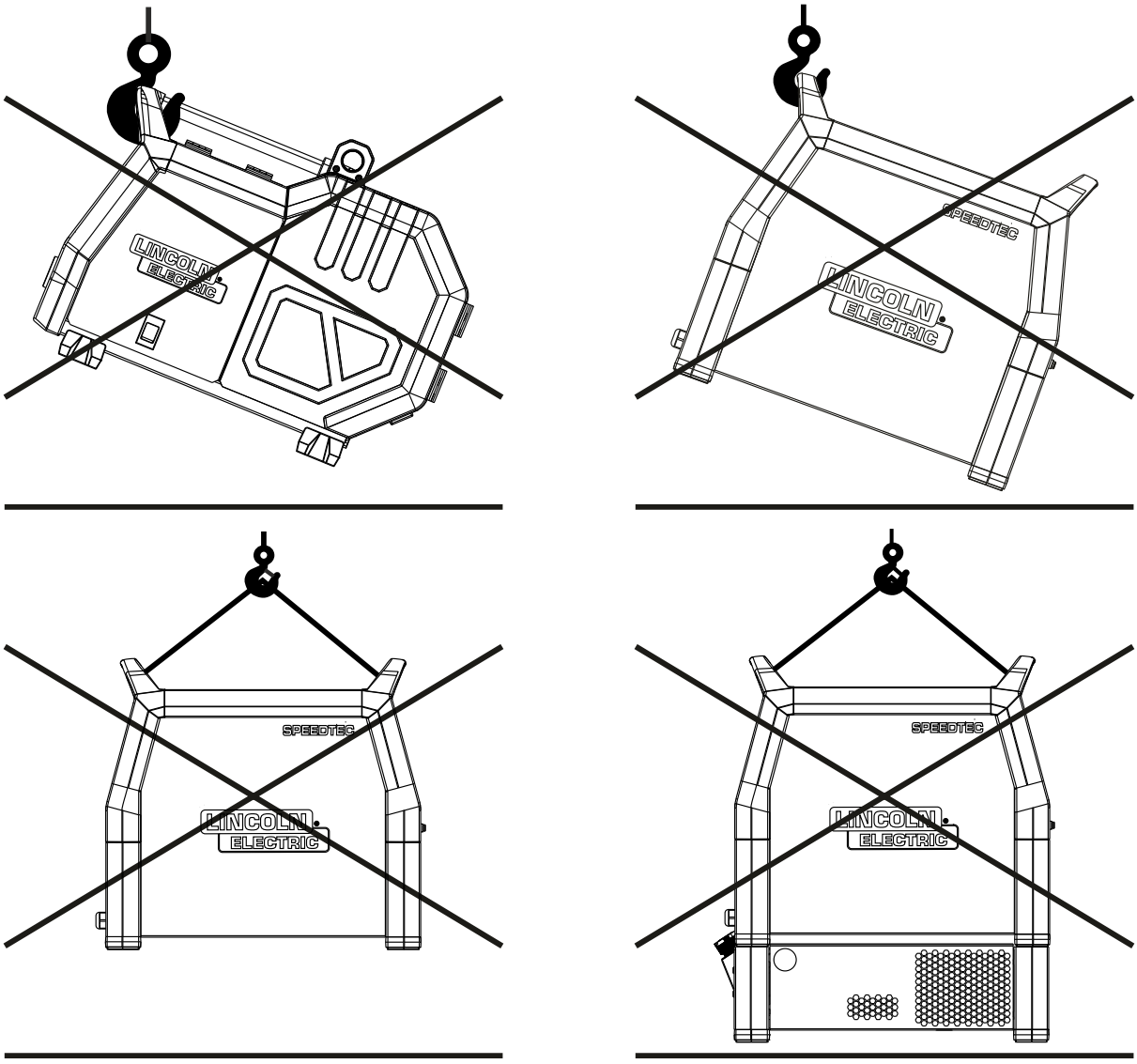

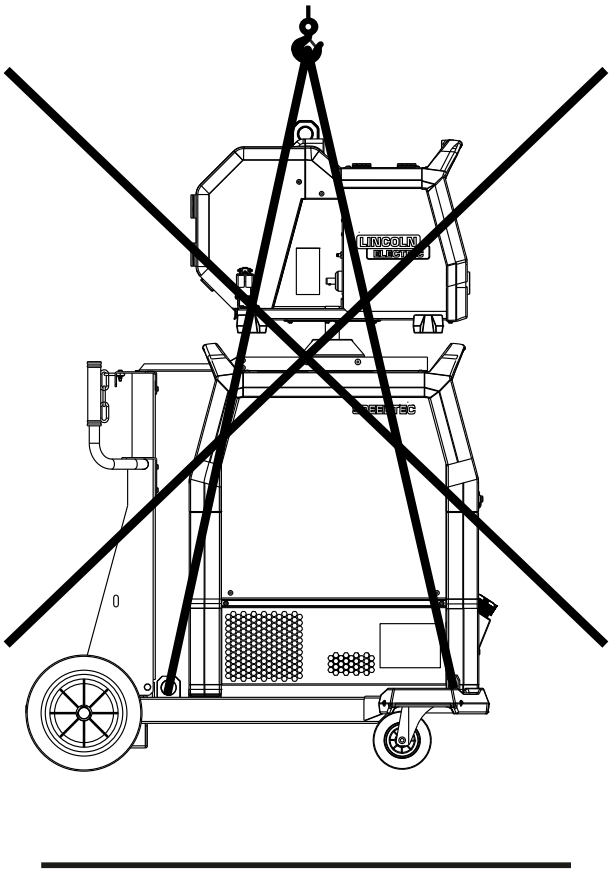

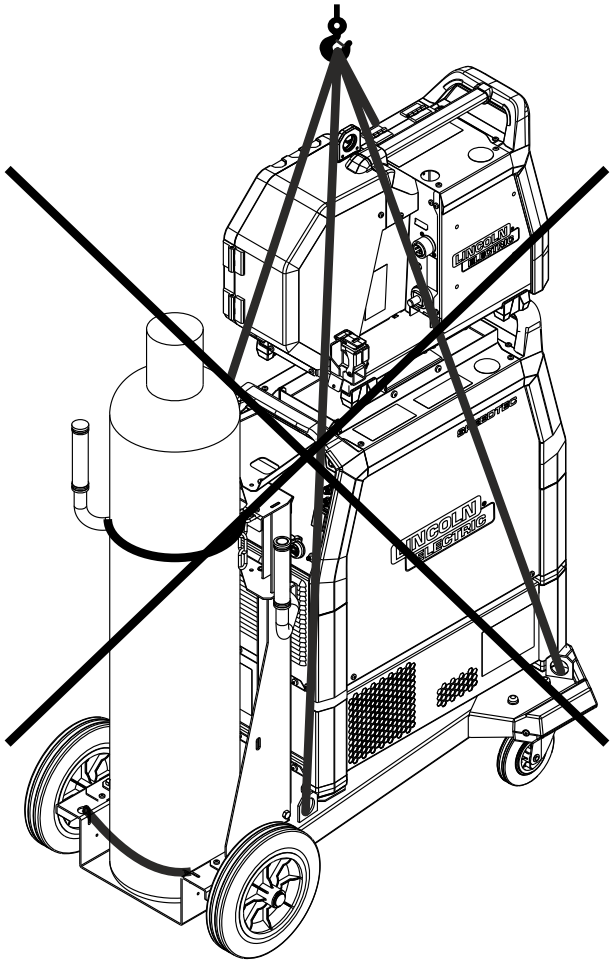

OPERATION

MACHINE SYMBOLOGY

GRAPHIC SYMBOLS THAT APPEAR ON THIS MACHINE OR IN THIS MANUAL			
	WARNING OR CAUTION		READ INSTRUCTION MANUAL
	ELECTRIC SHOCK CAN KILL		SHOCK HAZARD
	ARC RAYS CAN BURN		ELECTRIC AND MAGNETIC FIELDS MAY BE DANGEROUS
	FUMES AND GASES CAN BE DANGEROUS		WELDING SPARKS CAN CAUSE FIRE OR EXPLOSION
	WELDED MATERIALS CAN BURN		CYLINDER MAY EXPLODE IF DAMAGED
	MOVING PARTS ARE DANGEROUS		MOVING PARTS ARE DANGEROUS
	ON		OFF
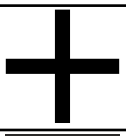	POSITIVE OUTPUT		NEGATIVE OUTPUT
	REMOTE CONTROL		VOLTAGE SENSE RECEPTACLE
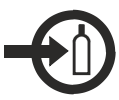	GAS INLET	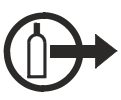	GAS OUTLET
	MACHINE STATUS OF WORK		THERMAL OVERLOAD INDICATOR

	INPUT VOLTAGE	VRD	VRD (VOLTAGE REDUCTION DEVICE)
F1	FUSE 1	F2	FUSE 2
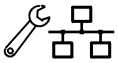	SYSTEM CONFIGURATION AND MAINTENANCE		NO INTERNET CONNECTION
IP	INGRESS PROTECTION CODE		INVERTER POWER SOURCE
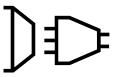	INPUT POWER	3~	THREE-PHASE AC SUPPLY
U_0	OPEN CIRCUIT VOLTAGE	X	DUTY CYCLE
I_2	OUTPUT CURRENT	U_2	OUTPUT VOLTAGE
U_1	INPUT VOLTAGE	I_{1max}	MAXIMUM INPUT CURRENT
I_{1eff}	EFFECTIVE INPUT CURRENT		
	GMAW		SMAW
	GTAW		
CE	COMPLIANCE WITH EU DIRECTIVES	EAC	COMPLIANCE WITH EAEU REGULATIONS
UK CA	COMPLIANCE WITH UK REGULATIONS		DO NOT DISPOSE OF WITH HOUSEHOLD WASTE

S	S SAFETY SYMBOL		

CONTROLS AND OPERATIONAL FEATURES

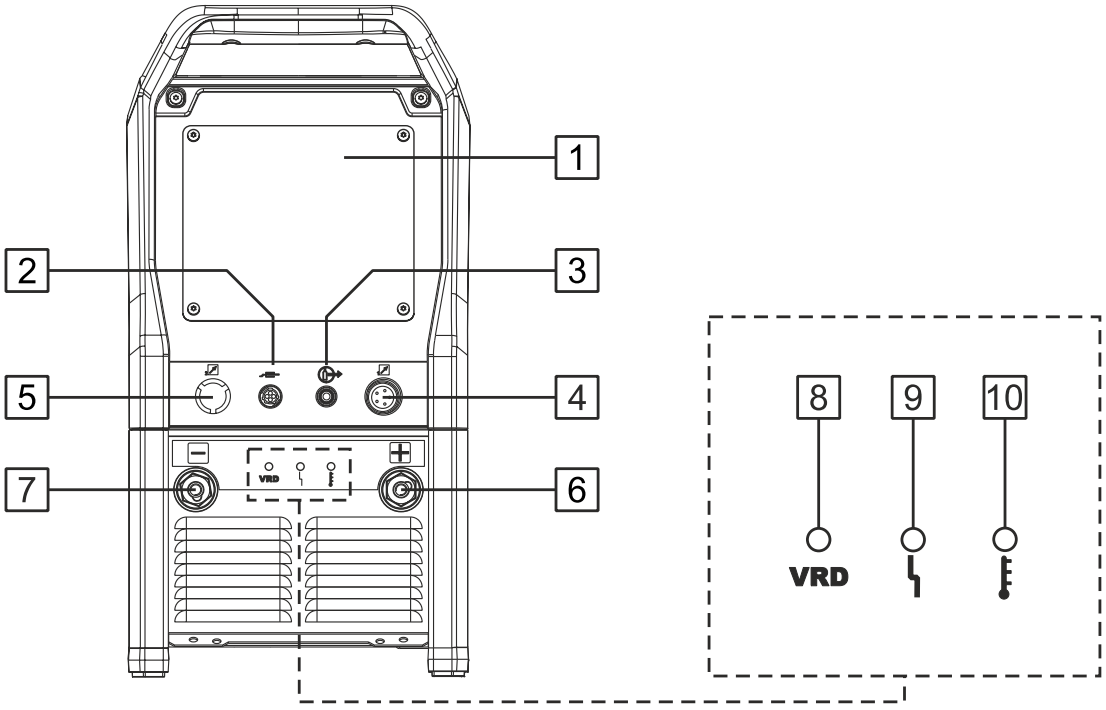

1. **User Interface Mounting Cover:** Allows installation of the Wire Feeder User Interface in place of the replaceable pane.
2. **Voltage Sense Receptacle.**
3. **Gas Outlet:**For connecting the gas hose from the interconnecting cable.
4. **Control Receptacle:** 5-pin receptacle for connecting a wire feeder or a remote control device. The ArcLink® protocol is used for communication between the wire feeder or remote controller and the power source.
5. **12-pin Remote Control Socket Location:** For connecting the 12 PIN REMOTE CONTROL KIT Gen4 (refer to ACCESSORIES AND OPTIONS on page D-1 section).
6. **Positive Output Socket for the Welding Circuit:** Depending on the power-source configuration, this socket is used for connecting a work lead, an electrode holder with lead, or the welding cable between the power source and the wire feeder. Rotate the connector clockwise to lock it into place.
7. **Negative Output Socket for the Welding Circuit:** Depending on the power-source configuration, this socket is used for connecting a work lead, an electrode holder with lead, or the welding cable between the power source and the wire feeder. Rotate the connector clockwise to lock it into place.
8. **VRD Indicator:** Indicates the operating status of the VRD (Voltage Reduction Device) function (VRD machine versions only).
9. **Machine Status Indicator:** Indicates the current operating status of the welding system and system communication. The indicator uses dual-color LED signals (green/red) to provide information about operating conditions and fault states. Normal operation is indicated by a steady green light. For detailed status indications and fault conditions, refer to the TROUBLESHOOTING GUIDE on page F-1 section.
10. **Thermal Overload Indicator:** Indicates that the welding machine has overheated.

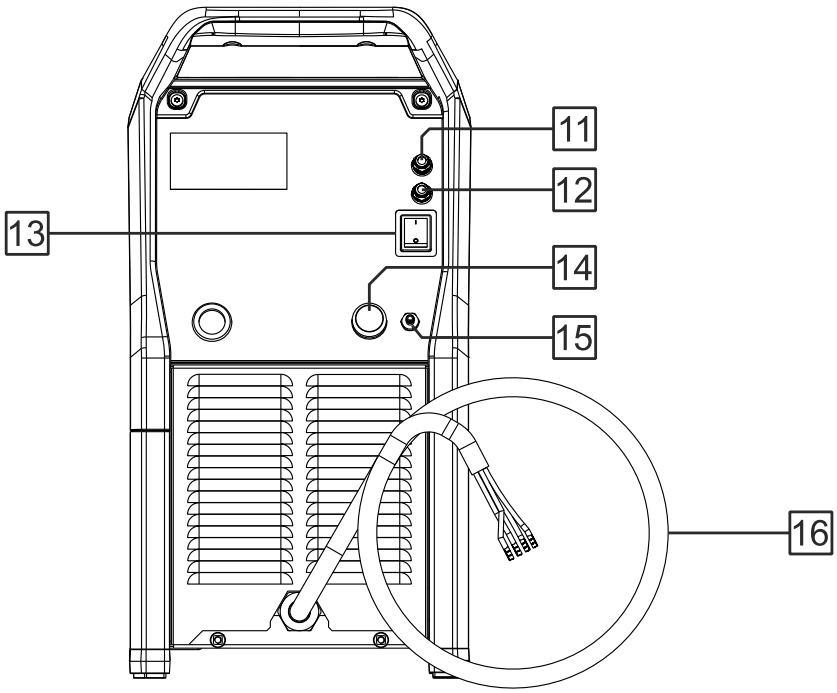

11.Source Electronics Fuse F1: Use the 0.5A/400V; (5x20)mm.

12.Cooling System Fuse F2: Use the 1A/400V; (5x20)mm.

13.Power Switch ON/OFF (I/O): Ensure the power source is properly connected to the mains supply before switching ON ("I").

14.RJ45 Ethernet Socket: Enables connection to a computer or network for software updates and diagnostics (Power Wave Manager™).

Note: Do not use this socket to connect to external networks or the Internet.

15.Gas Inlet: For connecting the shielding gas supply.

Note: The machine supports all suitable shielding gases up to a maximum pressure of 5 bar.

16.Power Lead (4.5 m, without plug): Install a suitable supply plug rated for the machine and compliant with applicable standards. The suitable supply plug must be rated for the machine, as specified in this manual, and conforms to all applicable standards. Installation must be performed by a qualified person.

WELDING CABLES CONNECTION

Safety Before You Start

- Disconnect input power and apply all required safety procedures before making any connections.
- Ensure that the power switch (I/O) is set to "O" (OFF).
- Use only undamaged cables with the correct cross-section for the rated current and duty cycle.
- Ensure that all connections are clean, tight, and fully seated to prevent overheating.

Note: Use the shortest cable lengths possible to minimize voltage drop and ensure stable arc performance.

Work Lead (Return) Connection

- Insert the work lead plug into the Negative Output Socket.
- Rotate the connector clockwise until it is fully locked.
- Attach the work clamp securely to the workpiece.
- Ensure good electrical contact. The contact point must be clean, bare metal, free from paint, rust, oil, or other contaminants.

Connecting the Wire Feeder to the Power Source

- Insert the positive welding cable (interconnecting cable) into the Positive Output Socket.
- Rotate the connector clockwise until fully locked.
- Connect the wire feeder control cable to the Control Receptacle.
- Ensure the connector is properly oriented and tighten the locking collar.
- Refer to the ACCESSORIES AND OPTIONS on page D-1 section for recommended cable types and lengths.

Final Checks

- Ensure all connectors are properly locked.
- Route the cables to avoid sharp edges, hot surfaces, pinch points, and moving parts.
- Position the work clamp as close as possible to the welding area.

Power-Up

- Restore input power.
- Set the power switch to "I" (ON).
- Wait until the Machine Status Indicator shows ready condition.
- Perform a test weld to confirm correct polarity and proper arc operation.

WATER COOLER CONNECTION

The power source **SPEEDTEC®400S/500S** is compatible with the **COOLARC® 60s** (refer to ACCESSORIES AND OPTIONS on page D-1 section).

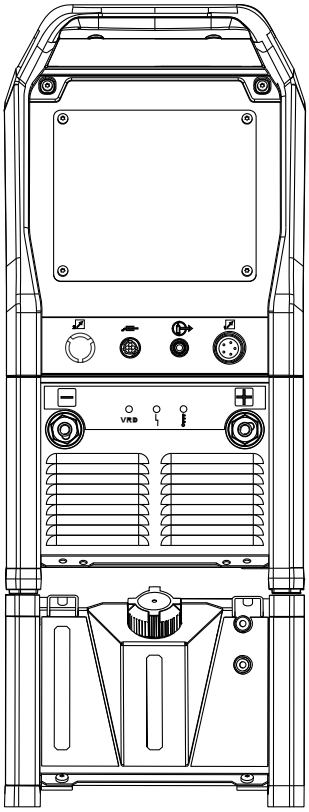

The cooler is powered directly from the welding power source via the 10-pin connector.

Input voltage: 400 V, 50/60 Hz

Connect the cooler strictly in accordance with the instructions supplied with the **Cool Arc® 60s**.

Note: Before connecting the cooler to the power source, read and fully understand the **Cool Arc® 60s** manual.

Note: Before connecting the cooler, also refer to the wire feeder instruction manual.

CONNECTION TO THE ETHERNET NETWORK

SPEEDTEC®400S/500S power source is equipped with an Ethernet communication interface (RJ45 Ethernet Socket).

ATTENTION



Do not use this socket to connect to external networks or the Internet.

RJ45 Ethernet Socket is for diagnostic purposes only.

Default power source settings are designated to Direct Connection where PC IP address is set to range 169.254.0.[3..254].

SPEEDTEC®400S/500S default factory settings

- DHCP: OFF
- IP Address: 169.254.0.2
- Subnet Mask: 255.255.255.0
- Default gateway: 169.254.0.1

Note: In order to change the **SPEEDTEC®400S/500S** settings, use the *Power Wave Manager* software from the *Power Wave Utilities Bundle* section of www.powerwavesoftware.com.

SPEEDTEC®400S/500S with PC connection

According to network infrastructure we can distinguish two different connection types:

1. Direct Connection
2. Local Area Network
    - with static IP addresses
    - with dynamic IP addresses (DHCP server, e.g. Router)

Direct Connection

Use below network settings for your PC.

Please refer guide how to change TCP/IP settings (IP address) in your PC operating system available in your system help or internet.

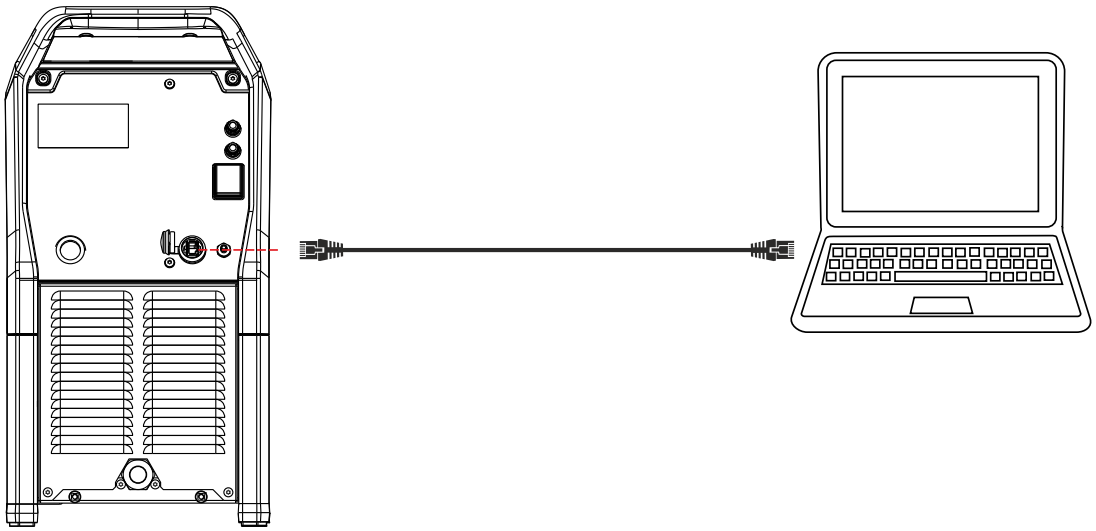

SPEEDTEC®400S/500S default settings:

- DHCP: OFF
- IP Address: 169.254.0.2
- Subnet Mask: 255.255.255.0
- Default gateway: 169.254.0.1

PC network settings:

- DHCP: OFF
- IP Address: 169.254.0.**3**
- Subnet Mask: 255.255.255.0
- Default gateway: 169.254.0.1

Note: After connecting the Ethernet cable, it may take up to 5 minutes to establish communication between the **SPEEDTEC®400S/500S** and the PC (especially when your PC was set to Obtain an IP address automatically from DHCP server before).

Local Area Network - Static IP Addresses

When the **SPEEDTEC®400S/500S** is connected to the network which is equipped with a Hub or Switch (**no DHCP server**) it is required to set proper IP address from the actual subnetwork range to **SPEEDTEC®400S/500S** and PC, as shown in the example below.

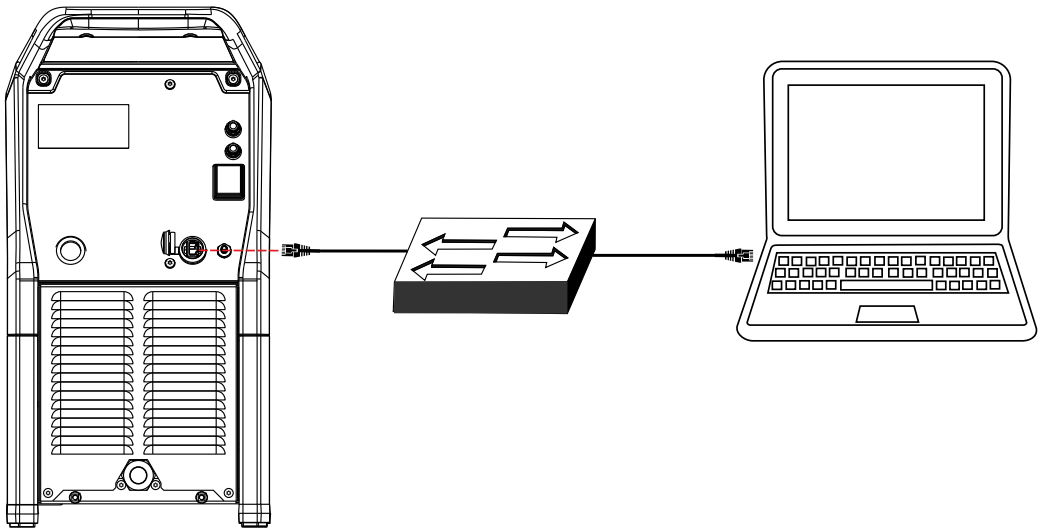

SPEEDTEC®400S/500S settings:

- DHCP: OFF
- IP Address: 172.26.1.**2**
- Subnet Mask: 255.255.255.0
- Default gateway: 172.26.1.1

No DHCP sever in the network:

- DHCP: OFF
- IP Address: 172.26.1.**[2..254]**
- Subnet Mask: 255.255.255.0
- Default gateway: 172.26.1.1

PC network settings:

- DHCP: OFF
- IP Address: 172.26.1.**3**
- Subnet Mask: 255.255.255.0
- Default gateway: 172.26.1.1

Note: Refer to the operating system documentation for instructions on how to change TCP/IP settings (IP address) on your PC.

In order to change **SPEEDTEC®400S/500S** IP address use Direct Connection on page B-8 first to change **SPEEDTEC®400S/500S** configuration.

- Connect to **SPEEDTEC®400S/500S** by Direct Connection.
- Run Power Wave Manager software on your PC (available on www.powerwavesoftware.com).
- Step 1: Choice "I do not know the IP address of the welder".
- Step 2: Click on row with the **SPEEDTEC®400S/500S** IP Address and Model Name.
- Step 3: Click on "Configure" button.
- Step 4: Change IP address, Subnet mask, Default gateway.
- Step 5: Click "OK" button.
- Confirm new settings by clicking "Yes". Machine will be restarted.
- Connect the **SPEEDTEC®400S/500S** to Network Switch back.

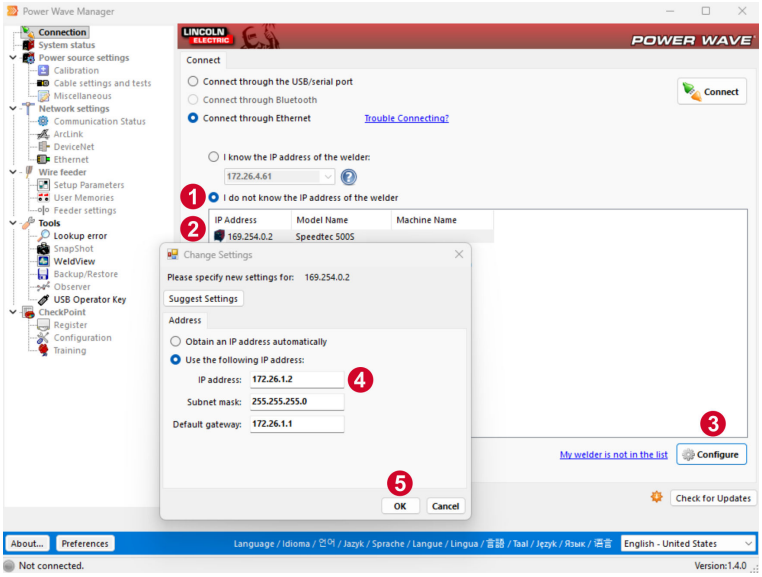

Local Area Network - Dynamic IP Addresses (DHCP Server, e.g. Router)

When the **SPEEDTEC®400S/500S** is connected to the network which is equipped with a DHCP server it is required to set proper configuration of the **SPEEDTEC®400S/500S** and PC, as shown in the example below.

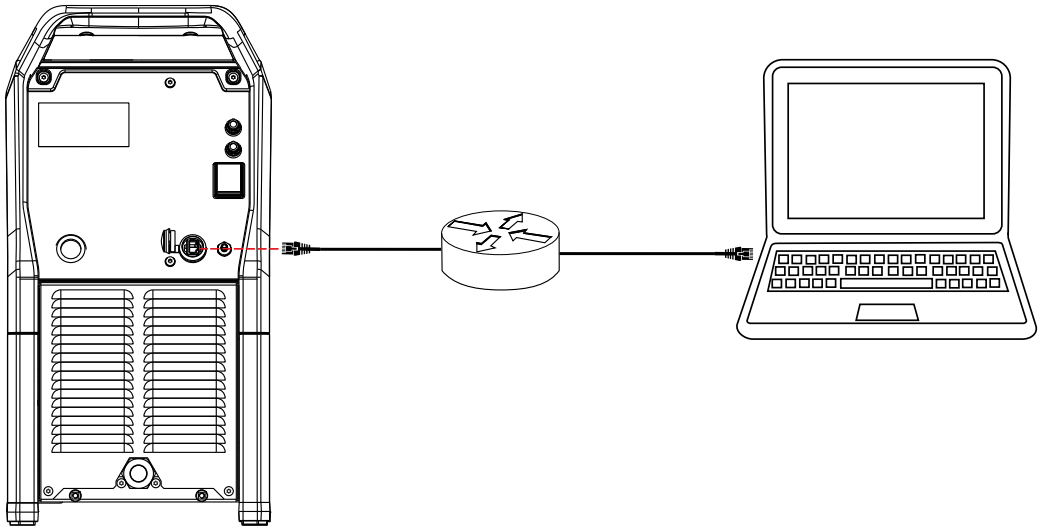

SPEEDTEC®400S/500S settings:

- DHCP: ON
- Obtain an IP address automatically

DHCP sever in the network:

- DHCP: ON

PC network settings:

- DHCP: ON
- Obtain an IP address automatically

Note: Refer to the operating system documentation for instructions on how to change TCP/IP settings (IP address) on your PC.

In order to switch **SPEEDTEC®400S/500S** to "Obtain an IP address automatically" use Direct Connection on page B-8 first to change **SPEEDTEC®400S/500S** configuration.

- Connect to **SPEEDTEC®400S/500S** by Direct Connection.

- Run Power Wave Manager software on your PC (available on www.powerwavesoftware.com).
- Step 1: Choice "I do not know the IP address of the welder".
- Step 2: Click on row with the **SPEEDTEC®400S/500S** IP Address and Model Name.
- Step 3: Click on "Configure" button.
- Step 4: Choose "Obtain an IP address automatically".
- Step 5: Click "OK" button.
- Confirm new settings by clicking "Yes". Machine will be restarted.
- Connect the **SPEEDTEC®400S/500S** to Network Router.

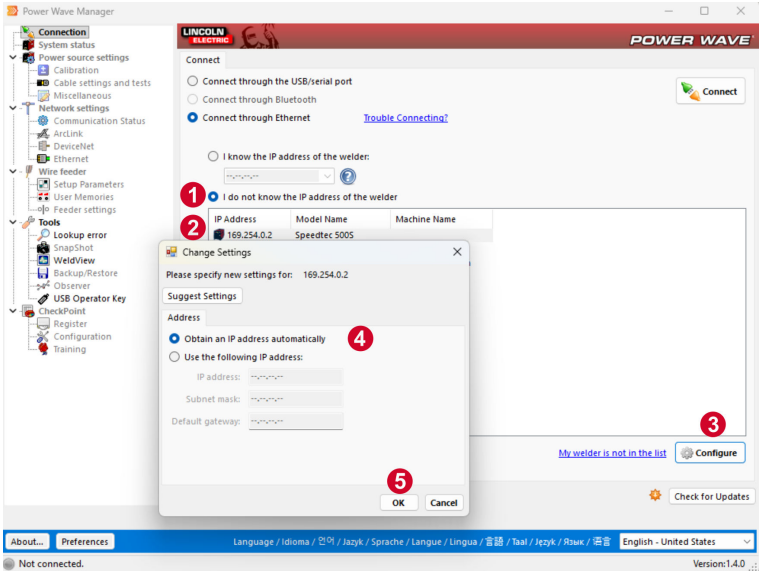

CONNECTION OVERVIEW

CONNECTION OVERVIEW

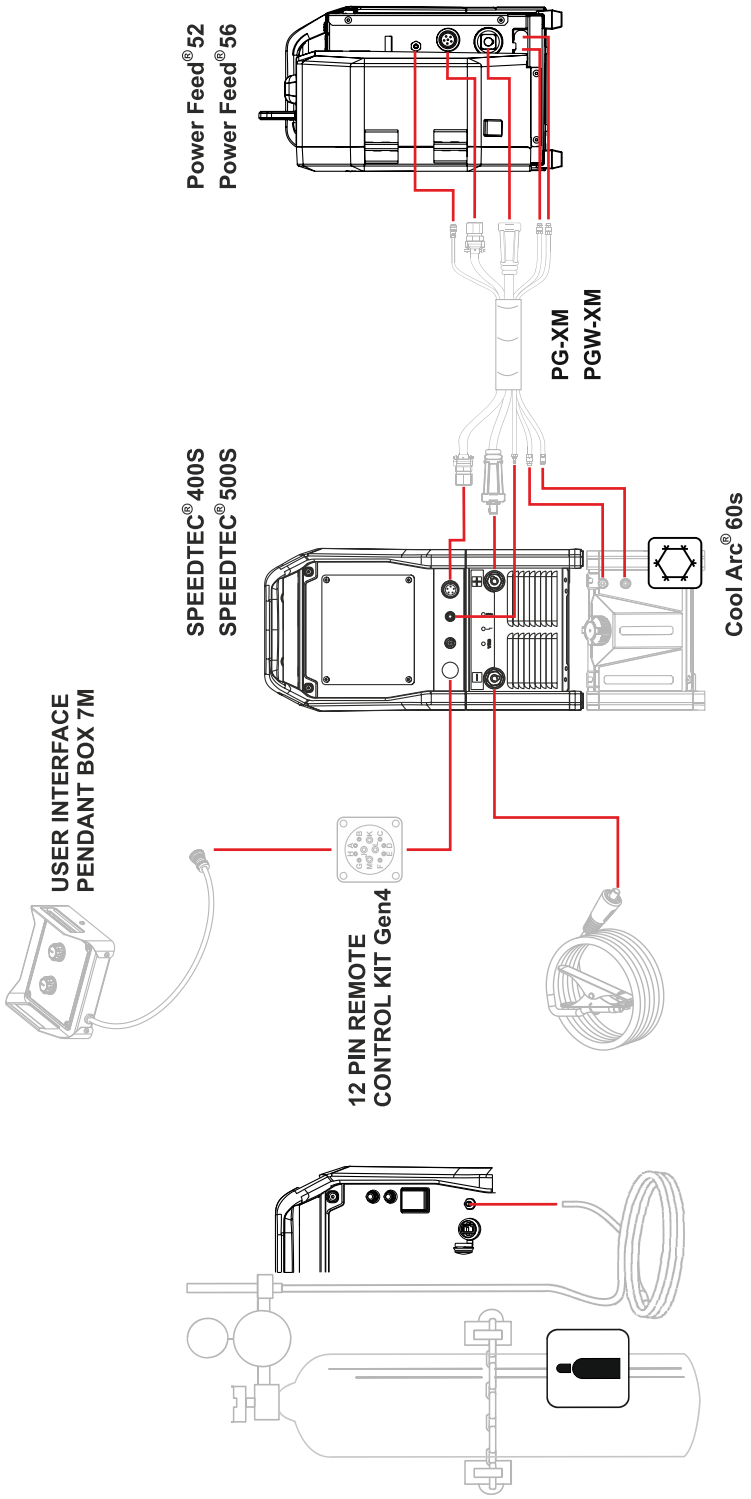

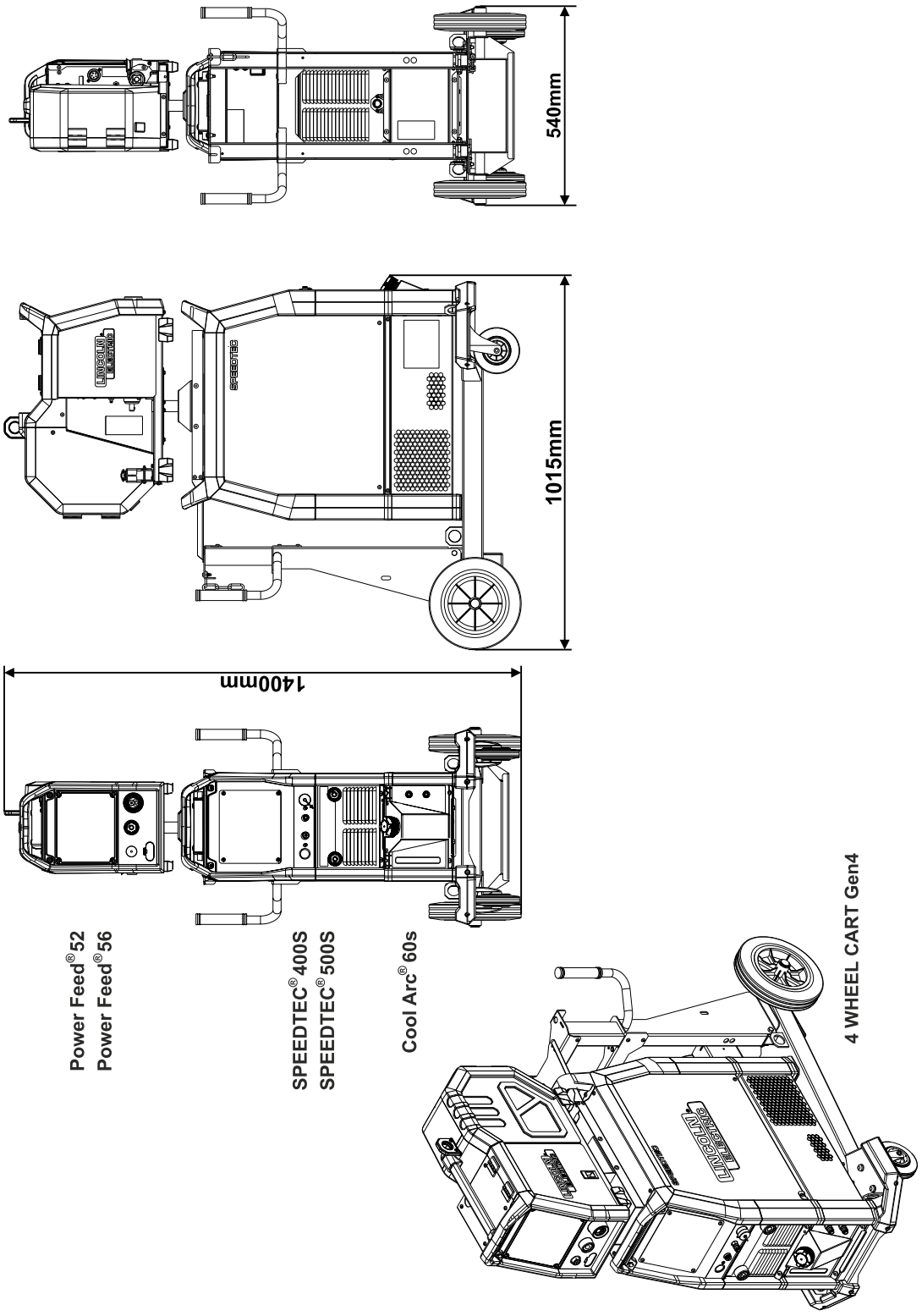
540mm
1015mm
1400mm
Power Feed® 52
Power Feed® 56
SPEEDTEC® 400S
SPEEDTEC® 500S
Cool Arc® 60s
4 WHEEL CART Gen4

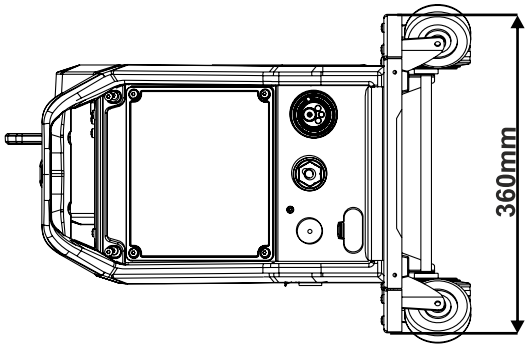

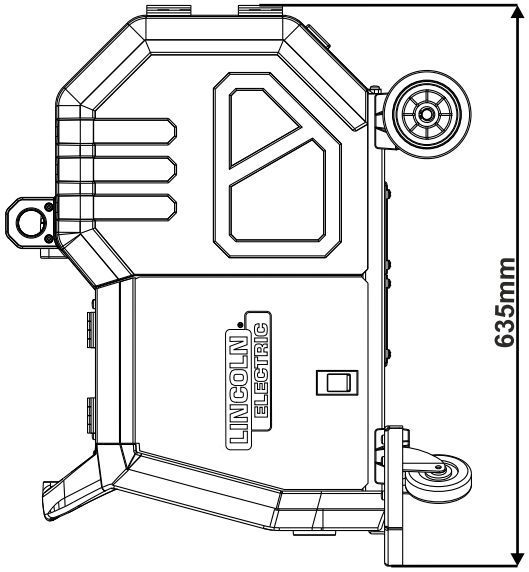

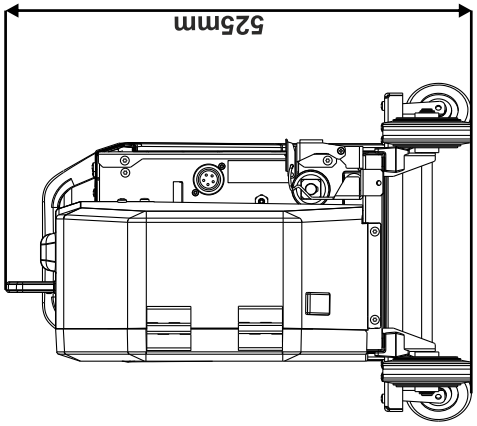

Power Feed®52
Power Feed®56

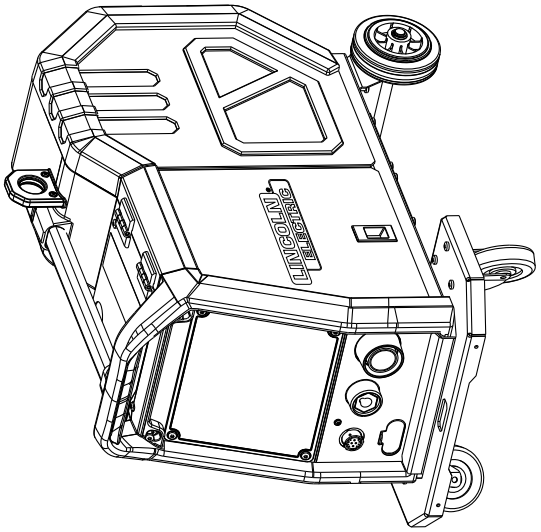

Power Feed®WHEELS KIT

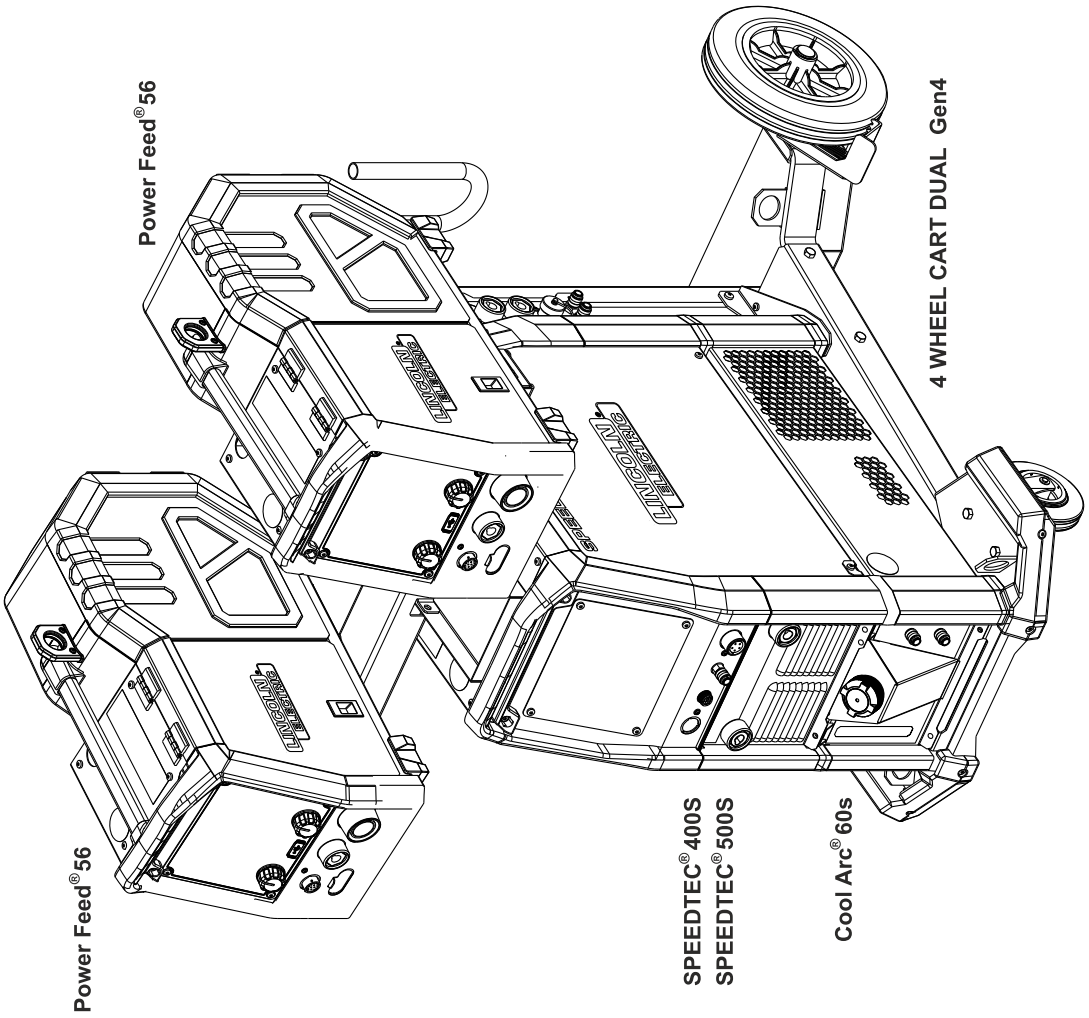
Power Feed® 56
4 WHEEL CART DUAL Gen4
Power Feed® 56
SPEEDTEC® 400S
SPEEDTEC® 500S
Cool Arc® 60s

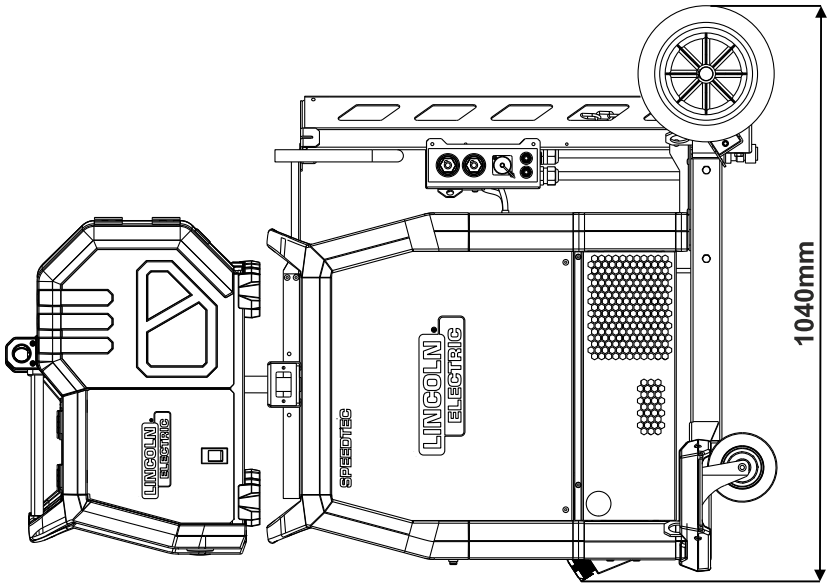
1040mm
LINCOLN ELECTRIC
SPEEDTEC
LINCOLN ELECTRIC

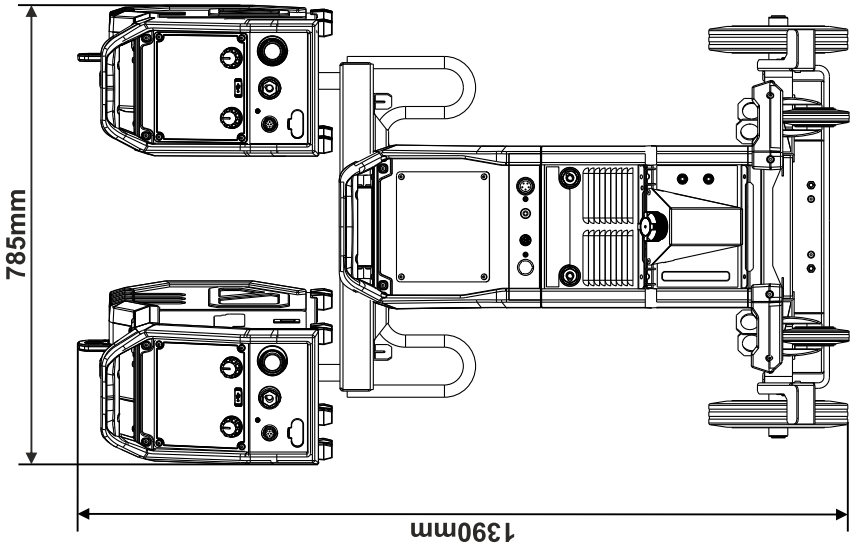
785mm
1390mm

ACCESSORIES AND OPTIONS

ACCESSORIES AND OPTIONS

COMPATIBLE WIRE FEEDER	
Part No.	**Description**
K14462-1	**Power Feed® 52**
K14464-1	**Power Feed® 56**
COMPATIBLE COOLING UNIT AND COOLANT	
Part No.	**Description**
K14469-1	**Cool Arc® 60s**
W000010167	FREEZCOOL 9.6L (coolant)
ACCESSORIES & OPTIONS	
Part No.	**Description**
KP10519-8	TIG ADAPTOR
K14471-1	12 PIN REMOTE CONTROL KIT Gen4
K14473-1	USER INTERFACE PENDANT BOX 7M
K14476-1	MIG GUN BALANCED ARM Gen4
K14477-1	4 WHEEL CART DUAL Gen4
K14479-1	4 WHEEL CART Gen4
WELDING CABLES	
Part No.	**Description**
W000260682	KIT ARC 50C50 PLUS
W000010136	FLAIR® 600 GOUGING TORCH with airflow regulated on the torch
GRD-600A-95-5M	GROUND CABLE 600A/95MM^2; 5 m
GRD-600A-95-10M	GROUND CABLE 600A/95MM^2; 10 m
INTERCONNECTION CABLES	
Part No.	**Description**
K14472-PG-2M	CABLE PACK 5PIN G 95MM2 2M
K14472-PG-5M	CABLE PACK 5PIN G 95MM2 5M
K14472-PG-10M	CABLE PACK 5PIN G 95MM2 10M
K14472-PG-15M	CABLE PACK 5PIN G 95MM2 15M
K14472-PG-20M	CABLE PACK 5PIN G 95MM2 20M
K14472-PG-25M	CABLE PACK 5PIN G 95MM2 25M
K14472-PG-30M	CABLE PACK 5PIN G 95MM2 30M
K14473-PGW-2M	CABLE PACK 5PIN W 95MM2 2M
K14473-PGW-5M	CABLE PACK 5PIN W 95MM2 5M
K14473-PGW-10M	CABLE PACK 5PIN W 95MM2 10M
K14473-PGW-15M	CABLE PACK 5PIN W 95MM2 15M
K14473-PGW-20M	CABLE PACK 5PIN W 95MM2 20M
K14473-PGW-25M	CABLE PACK 5PIN W 95MM2 25M
K14473-PGW-30M	CABLE PACK 5PIN W 95MM2 30M

MAINTENANCE

MAINTENANCE

⚠ WARNING



For any repair operations, modifications, or maintenance activities, it is recommended to contact the nearest Technical Service Center or Lincoln Electric. Repairs or modifications performed by unauthorized personnel will result in the loss of the manufacturer's warranty.

⚠ WARNING



Any noticeable damage should be reported immediately and repaired.

Routine maintenance (daily):

- Check the condition of insulation and connections of the work leads and the insulation of the power lead. If any damage is found, replace the lead immediately.
- Remove spatter from the welding gun nozzle. Spatter buildup may interfere with proper shielding gas flow.
- Check the condition of the welding gun and replace it if necessary.
- Check the condition and operation of the cooling fan. Ensure that all airflow openings are clean and unobstructed.

Periodic maintenance (every 200 operating hours, but at least once per year):

- Keep the machine clean. Using dry, low-pressure compressed air, remove dust from the external surfaces and from inside the machine.
- If required, clean and tighten all welding terminals.

The frequency of maintenance operations may vary depending on the operating environment.

⚠ WARNING



Do not touch electrically live parts.

⚠ WARNING



Before removing any covers, switch off the equipment and disconnect the power lead from the mains supply.

⚠ WARNING



The mains supply must be disconnected before performing any maintenance or service work. After each repair, perform appropriate safety checks before returning the equipment to operation.

TROUBLESHOOTING

HOW TO USE TROUBLESHOOTING GUIDE

⚠ WARNING



Service and Repair should only be performed by Lincoln Electric Factory Trained Personnel. Unauthorized repairs performed on this equipment may result in danger to the technician and machine operator and will invalidate your factory warranty. For your safety and to avoid Electrical Shock, please observe all safety notes and precautions detailed throughout this manual.

This Troubleshooting Guide is provided to help you locate and repair possible machine malfunctions. Simply follow the three-step procedure listed below.

1. **LOCATE PROBLEM (SYMPTOM)**

   Look under the column labeled “PROBLEM (SYMPTOMS)”. This column describes possible symptoms that the machine may exhibit. Find the listing that best describes the symptom that the machine is exhibiting.

2. **POSSIBLE CAUSE**

   The second column labeled “POSSIBLE CAUSE” lists the obvious external possibilities that may contribute to the machine symptom.

3. **RECOMMENDED COURSE OF ACTION**

   This column provides a course of action for the Possible Cause, generally it states to contact your local Lincoln Authorized Field Service Facility.

⚠ CAUTION



If you do not understand or are unable to perform the Recommended Course of Action safely, contact your local Lincoln Authorized Field Service Facility.

Observe all additional safety guidelines detailed throughout this manual.

TROUBLESHOOTING GUIDE

Machine Status Light Indications

Table 3 :Machine Status Light Indications

Indicator state	Indicator Condition	Meaning
Steady Green	Normal operation	Indicates that the system is operating correctly and is ready for use.

Indicator state	Indicator Condition	Meaning
Flashing Green	Initialization	Indicates that the system is initializing after power-up or reset. Normal for first 1-10 seconds after power is turned on, or if the system configuration is changed during operation.
Alternating Green / Red	Fault condition	A system fault has been detected. Individual code digits are flashed in red with a long pause between digits. If more than one code is present, the codes will be separated by green light. Read the error code before the machine is turned off. If occurs, to clear the error try to turn Off the machine, wait for a few seconds, then turn ON again. If the error remains, a maintenance is required. Please contact the nearest authorized technical service center or Lincoln Electric and report the error code read.
Steady Red	Error / No communication	Indicates a system error or loss of communication with a connected device.

Note: If an error occurs, switch the machine OFF, wait a few seconds, and switch ON again. If the error persists, contact an authorized service center and report the displayed error code.

Error Codes

The table below lists basic fault conditions that may occur. For a complete list of fault codes, contact an authorized Lincoln Electric Service Facility.

Table 4 :Error Codes

Error Code	Error Description	Cause	Recommended Course of Action
6	Power source is not connected.	The User Interface cannot seem to communicate with the Power Source.	• Check cable connections between the power source and the user interface.
18	Configuration error	The machine could not properly configure the devices that are attached to it. This configuration problem could be caused by the type of devices that are connected to the machine or a required device that is not connected.	• Consult the Operator's Manual for proper device configuration. • Verify all devices in the system are properly powered.

36	The machine has shut down because it has overheated.	System detected a temperature level beyond the normal system operating limit.	• Be sure process does not exceed duty cycle limit of the machine. • Check the setup for proper air flow around and through the system. • Check that the system has been properly maintained, including removal of accumulated dust and dirt from the intake and outlet louvers. • When the machine has cooled down to a safe level, the interface signals this by flashing two LEDs next to Button or start welding operation by the torch trigger.
46, 54	Output current exceeded	The average value of the output current has been exceeded.	• Verify that the welding circuit does not have a short in it. • Verify stick out, wire size, and gas are correct for the process that is selected. • Decrease the value of the output parameters. • Check the weld circuit for short circuits and other leakage paths that may result in excessive current.
49	Lack of phase	Single phase input operation has been detected.	• Verify all fuses are good. • Verify all three legs of the input power are present at the input contactor. When the contactor closes, be sure all three legs are present on the output side as well (toward the rectifier). • Check the condition of the electrical system.
71	Output power exceeded	The machine detected excessive output power.	• Verify stick out, wire size, and gas are correct for the process that is selected. • Decrease the value of the output parameters. • Check the weld circuit for short circuits and other leakage paths that may result in excessive current.

81	Motor overload, long term.	The wire drive motor has overheated. Check that the electrode slides easily through the gun and cable.	• Remove tight bends from the gun and cable. • Check that the spindle brake is not too tight. • Verify the adequacy of the electrode to the welding process. • Verify a high quality electrode is being used. • Check drive rolls alignment and gears. • Wait for the error to reset and the motor to cool (approximately 1 minute).
92	No coolant flow	There is no coolant flow in the cooler after 3 seconds of welding.	• Make sure there is enough coolant in the tank and that auxiliary power is supplied. • Make sure the pump is working. When the trigger is pulled the pump should run.
262	Incompatible equipment	Required configuration could not be found in the machine. Verify the configuration and the status of the devices connected to the machine.	• Check if the connected power source is in the list of compatible power sources. • Update the system with the latest firmware.
269	Arc was lost or never established	An arc was not established within the amount of time specified by setup parameter P.22 after the trigger was pulled or if the trigger remained pulled after an arc was lost. This error detection is only active in wire welding modes and is intended to prevent an electrically hot wire from being fed in the absence of an arc.	• Adjust P.22 based on weld WFS, run-in WFS, etc. if arc error detection is needed • Set P.22 to OFF if arc error detection is not needed

APPENDIX

WIRING DIAGRAM

WIRING DIAGRAM - CODE: 50781, 50782

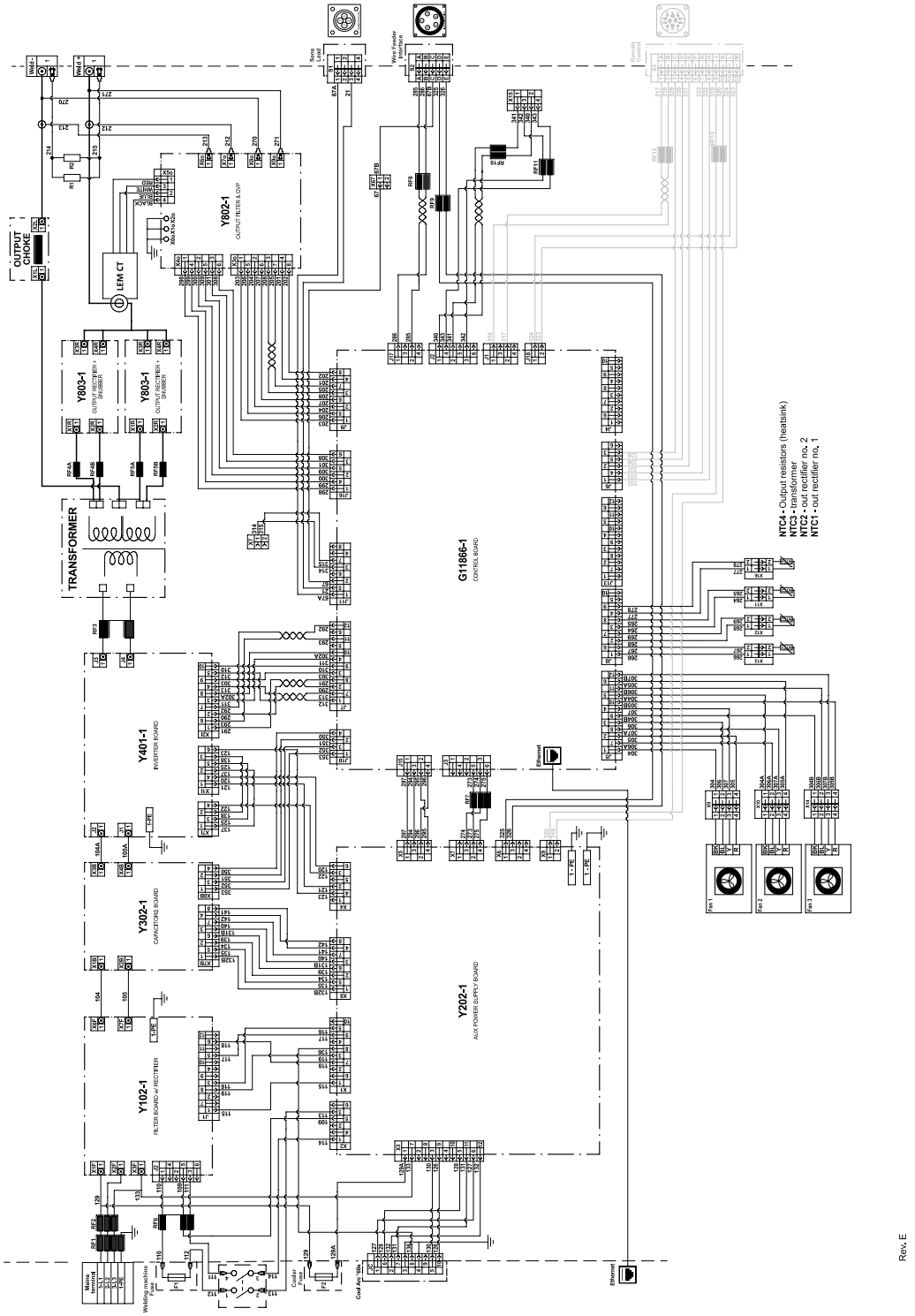

CUSTOMER ASSISTANCE POLICY

CUSTOMER ASSISTANCE POLICY

The business of Lincoln Electric is manufacturing and selling high quality welding equipment, automated welding systems, consumables, and cutting equipment. Our challenge is to meet the needs of our customers, who are experts in their fields, and to exceed their expectations. On occasion, purchasers may ask Lincoln Electric for information or technical information about their use of our products. Our employees respond to inquiries to the best of their ability based on information and specifications provided to them by the customers and the knowledge they may have concerning the application. Our employees, however, are not in a position to verify the information provided or to evaluate the engineering requirements for the particular weldment, or to provide engineering advice in relation to a specific situation or application. Accordingly, Lincoln Electric does not warrant or guarantee or assume any liability with respect to such information or communications. Moreover, the provision of such information or technical information does not create, expand, or alter any warranty on our products. Any express or implied warranty that might arise from the information or technical information, including any implied warranty of merchantability or any warranty of fitness for any customers' particular purpose or any other equivalent or similar warranty is specifically disclaimed.

Lincoln Electric is a responsive manufacturer, but the definition of specifications, and the selection and use of specific products sold by Lincoln Electric is solely within the control of, and remains the sole responsibility of the customer. Many variables beyond the control of Lincoln Electric affect the results obtained in applying these types of fabrication methods and service requirements.

WELD FUME CONTROL EQUIPMENT

The operation of welding fume control equipment is affected by various factors including proper use and positioning of the equipment, maintenance of the equipment and the specific welding procedure and application involved. Worker exposure level should be checked upon installation and periodically thereafter to be certain it is within applicable OSHA PEL and ACGIH TLV limits.

PARTS LIST

Content/Details may be changed or updated without notice. For most current Instruction Manuals, go to PARTS.LINCOLNELECTRIC.COM.