SVM 3224
Rev.00 10-2026

PF52

For use with machines having code numbers: 50764



SERVICE MANUAL

LINCOLN ELECTRIC EUROPE
www.lincolnelectric.eu

INDEX OF CONTENTS

INDEX OF CONTENTS 2
TECHNICAL SPECIFICATIONS 3
MAJOR COMPONENTS LOCATION 4
THEORY OF OPERATION 5
HOW TO USE TROUBLESHOOTING GUIDE 7
ERROR CODES 10
CASE COVER REMOVAL PROCEDURE 13
FEEDER MOTOR CONTROL BOARD TEST 15
USER INTERFACE BOARD TEST 18
GAS SOLENOID TEST 20
WIRE DRIVE MOTOR TEST 22
WIRE DRIVE MOTOR TACHOMETER TEST 24
DISASSEMBLY OPERATIONS 26
ELECTRICAL SCHEMATICS 30
NOTE 31

ISO OERLIKON

ISO OERLIKON AG Schweisstechnik
CH-5737 Menziken AG – Tel. +41 (0)62 771 83 05
E-Mail info@iso-oerlikon.ch – www.iso-oerlikon.ch

TECHNICAL SPECIFICATIONS

NAME			INDEX		
LF 52D			**K14186-1**		
INPUT					
Input Voltage U_1		Input Amperes I_1		EMC Class	
40Vdc		4Adc		A	
RATED OUTPUT					
Duty Cycle 40°C (based on a 10 min. period)			Output Current		
100%			420A		
60%			500A		
OUTPUT RANGE					
Welding Current Range			Peak Open Circuit Voltage		
5 ÷ 500A			113Vdc peak		
DIMENSION					
Weight		Height	Width		Length
17 kg		460 mm	245 mm		600 mm
WIRE FEED SPEED RANGE / WIRE DIAMETER					
WFS Range	Drive Rolls	Drive roll diameter	Solid Wires	Aluminum Wires	Cored Wires
1.5 ÷ 25 m/min	4	Ø37	0.6 ÷ 1.6 mm	1.0 ÷ 1.6 mm	0.9 ÷ 1.6 mm
OTHERS					
Protection Rating		Maximum Gas Pressure	Operating Temperature		Storage Temperature
IP23		0,5 MPa (5 bar)	from -10°C to +40°C		from -25°C to 55°C

ONLINE ACCESS TO INSTRUCTION MANUAL

The current version of the instruction manual is available online at the following link:

https://www.lincolnelectric.com/en-GB/Operators-Manuals

It is recommended to use the online version as the most up-to-date source of information

MAJOR COMPONENTS LOCATION

PF52

1. Motor Control Board (mounted on the left side panel)
2. Gas Solenoid
3. Motor
4. Wire Drive
5. Reel Hub
6. User Interface Board (STD)

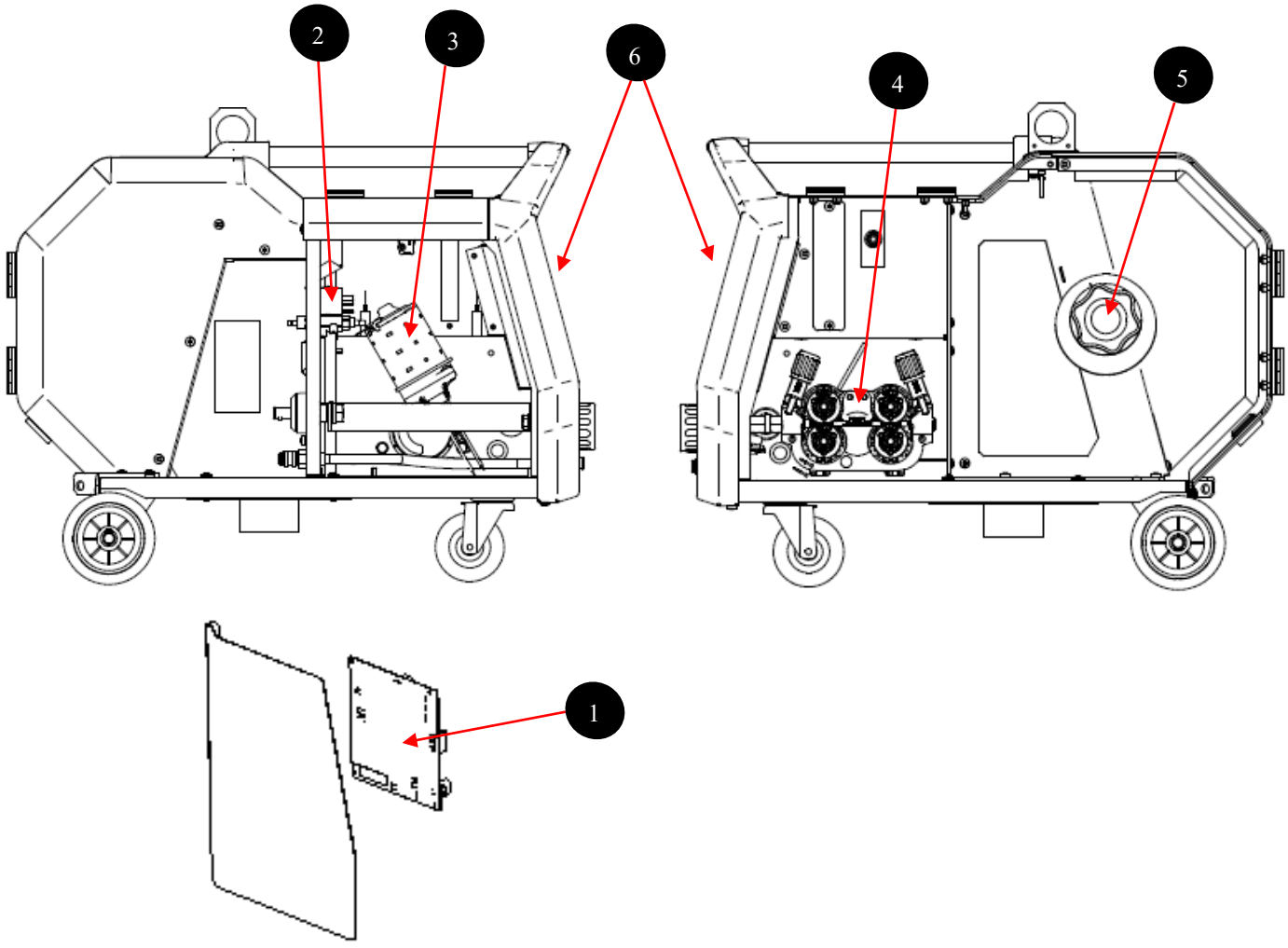

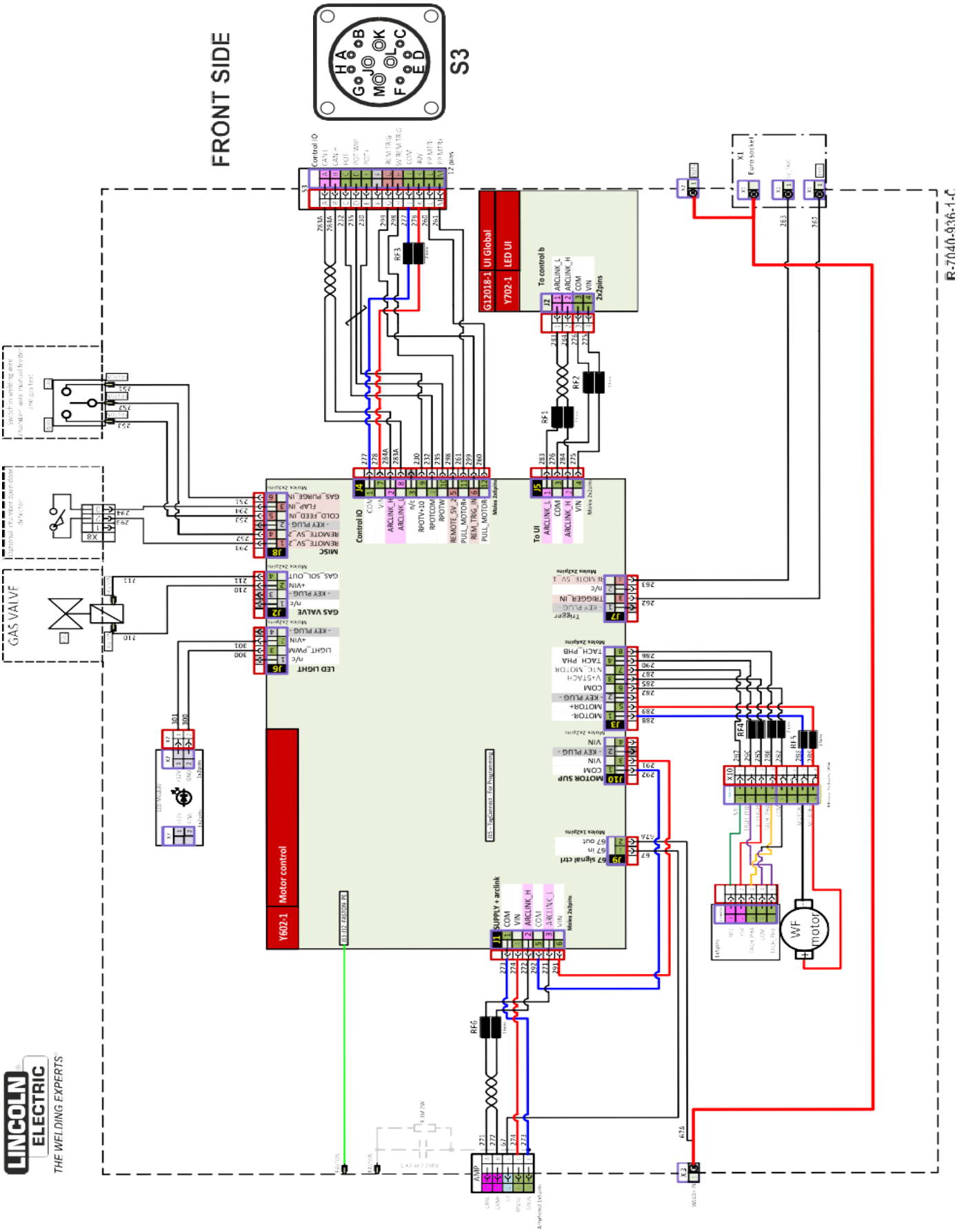
FRONT SIDE
S3
Control IO
G12018-1 UI Global
Y702-1 LED UI
To control b
Control IO
To UI
MISC
GAS VALVE
LED LIGHT
Y602.1 Motor control
MOTOR SUP
SUPPLY + arclink
GAS VALVE
WF motor
LINCOLN ELECTRIC
THE WELDING EXPERTS

GENERAL DESCRIPTION

The **PF52** is four rolls digitally controlled wire feeders that operate on 40 VDC input power. **PF52** supports all welding modes installed on power sources.
Network communications, PC board input power, and arc voltage feedback is received and transmitted through the input male plug on the back of the feeders.

MOTOR CONTROL BOARD

The motor control board processes the information received from the various user operated switches, (cold inch, gas purge), the data reveived from the User Interface and sends the signals to energize the active components such as the solenoid and wire drive motor.
The tachometer feedback signal is also processed by this board which regulates the motor supply voltage to maintain the required wire feed speed.

USER INTERFACE BOARD

PF52 uses a Standard User Interface. It is possible to recall welding programs from the power source, pre-set welding parameters, read actual values during welding and define all welding parameters like start, crater, 2-4 steps, burn back and many others.
Informations and data are exchanged between the User Interface and the motor control board via digital Arclink protocol.

HOW TO USE TROUBLESHOOTING GUIDE

Service and repair should be performed by only Lincoln Electric Factory Trained Personnel. Unauthorized repairs performed on this equipment may result in danger to the technician and machine operator and will invalidate your factory warranty. For your safety and to avoid Electrical Shock, please observe all safety notes and precautions detailed throughout this manual.

This Troubleshooting Guide is provided to help you locate and repair possible machine malfunctions. Simply follow the three-step procedure listed below.

Step 1. LOCATE PROBLEM (SYMPTOM). Look under the column labeled “PROBLEMS”. This column describes possible symptoms that the machine may exhibit. Find the listing that best describes the symptoms that the machine is exhibiting. Symptoms are grouped into three main categories: Output Problems, Function Problems, and LED Function Problems.

Step 2. PERFORM EXTERNAL TESTS. The second column, labeled “CHECKS”, lists the obvious external possibilities that may contribute to the machine symptom. Perform these tests/checks in the order listed. In general, these tests can be conducted without removing the case wrap-around cover.

Step 3. PERFORM COMPONENT TESTS. The last column, labeled “RECOMMENDED COURSE OF ACTION” lists the most likely components that may have failed in your machine. It also specifies the appropriate test procedure to verify that the subject component is either good or bad. If there are a number of possible components, check the components in the order listed to eliminate one possibility at a time until you locate the cause of your problem.

All of the referenced test procedures referred to in the Troubleshooting Guide are described in detail at the end of this chapter. Refer to the Troubleshooting and Repair Table of Contents to locate each specific Test Procedure. All of the referred to test points, components, terminal strips, etc., can be found on the referenced electrical wiring diagrams and schematics. Refer to the Wiring Diagrams Section Table of Contents to locate the appropriate diagram.

WARNING



ELECTRIC SHOCK can kill

- Have an electrician to install and service this equipment
- Turn the input power off at the fuse box before working on equipment
- Do not touch electrically hot parts
- Prior to performing preventive maintenance, perform the following capacitor discharge procedure to avoid electric shock

---

Sometimes machine failures appear to be due to PC board failures. These problems can sometimes be traced to poor electrical connections. To avoid problems when troubleshooting and replacing PC boards, please use the following procedure:

1. Determine to the best of your technical ability that the PC board is the most likely component causing the failure symptom.
2. Check for loose connections at the PC board to assure that the PC board is properly connected.
3. If the problem persists, replace the suspect PC board using standard practices to avoid static electrical damage and electrical shock.
4. Test the machine to determine if the failure symptom has been corrected by the replacement PC board.

NOTE: Allow the machine to heat up so that all electrical components can reach their operating temperature.

5. Remove the replacement PC board and substitute it with the original PC board to recreate the original problem.
   - If the original problem does not reappear by substituting the original board, then the PC board was not the problem. Continue to look for bad connections in the control wiring harness, junction blocks, and terminal strips.
   - If the original problem is recreated by the substitution of the original board, then the PC board was the problem. Reinstall the replacement PC board and test the machine.
6. Always indicate that this procedure was followed when warranty reports are to be submitted.

NOTE: Following this procedure and writing on the warranty report, “INSTALLED AND SWITCHED PC BOARDS TO VERIFY PROBLEM,” will help avoid denial of legitimate PC board warranty claims.

TROUBLESHOOTING

!! WARNING !! **BEFORE CONNECT POWER SUPPLY, MAKE A CAREFUL VISUAL INSPECTION INSIDE THE MACHINE, CHECK ALL THE BOARDS AND HARNESS.**

PROBLEMS / SYMPTOMS	CHECKS / ERROR DESCRIPTION	RECOMMENDED COURSE OF ACTION
A VISUAL DAMAGE IS EVIDENT WHEN YOU OPEN THE COVER	----------	• REPLACE THE BROKEN PART AND PERFORM THE TESTS FOR THE OTHER MACHINE COMPONENTS
NO WIRE FEED AND SOLENOID	• MAKE SURE THAT THE PF52 RECEIVES THE 40VDC POWER SUPPLY • THE GUN TRIGGER MAY BE DEFECT	• PERFORME THE MOTOR BOARD TEST • CHECK AND REPLACE THE GUN TRIGGER IF NECESSARY
NO CONTROL OF WIRE FEED SPEED	• THE TACHIMETER MAY BE FAULTY • THE USER INTERFACE BOARD MAY BE MAULTY • THE MOTOR BOARD MAY BE FAULTY	• PERFORM THE TACHIMETER TEST • REPLACE THE USER ITERFACE • PERFORM THE MOTOR BOARD TEST AND REPLACE IF DEFECT
THERE IS NO WELDING OUTPUT WHEN THE GUN TRIGGER IS PRESSED. THE WIRE FEEDS NORMALLY AND THE GAS SOLENOID IS ACTIVATED PROPERLY	• THE ARC LINK CABLES BETWEEN POWER FEED AND POWER SOURCE MAY BE DEFECT. • THE MOTOR BOARD MAY BE FAULTY • THE POWER SOURCE MAY BE DEFECT	• CHECK STATUS LED ON POWER SOURCE FOR COMMUNICATION ERROR • CHECK THE ARCLINK CABLES FOR GOOD CONTINUITY • REPLACE THE MOTOR BOARD • PERFORM THE POWER SOURCE TESTS
THE WELDING VOLTAGE IS NOT CHANGING WHILE TURNING THE USER INTERFACE VOLTAGE ENCODER	• THE USER INTERFACE MAY BE FAULTY • THE MOTOR BOARD MAY BE FAULTY • THE POWER SOURCE MAY BE DEFECT	• REPLACE THE USER INTERFACE • REPLACE THE MOTOR BOARD • PERFORM THE POWER SOURCE TEST
WELDING PROCESS DOES NOT CHANGE WHEN THE LEFT PUSH BUTTON ON THE UI IS PRESSED	• MAY BE A SOFTWARE PROBLEM ON UI IS PRESENT • THE BUTTON IS DEFECT	• RE-FLASH FEEDER SOFTWARE • REPLACE THE UI BOARD
THE FEEDER RESET ITSELF WHEN THE WELD STARTS	• NOISE CAN BE THE CAUSE OF THIS PROBLEM	• CHECK CAPACITOR FOR GOOD CONNECTIONS TO ARCLINC CONNECTOR PIN E AND FEEDER FRAME (SEE FEEDER WIRING DIAGRAM)
WITH TRIGGER PRESSED THE ROLLS DO NOT TURN BUT GAS SOLENOID IS WORKING PROPERLY	• LOOSE OR FAULTY MOTOR CONNECTION MAY BE PRESENT • THE MOTOR BOARD MAY BE FAULTY (NO POWER TO THE MOTOR)	• CHECK LEADS 288 AND 289 CONNECTIONS FROM MOTOR BOARD CONNECTOR TO MOTOR CONNECTOR (SEE FEEDERS WIRING DIAGRAMS) • PERFORM THE MOTOR BOARD TEST
NO WIRE FEEDING BUT THE DRIVE ROLLS ARE TURNING	• THE DRIVE ROLLS PRESSURE MAY BE NOT CORRECT • THE DRIVE ROLLS OR WIRE GUIDE MAY BE NOT CORRECTLY INSTALLED • A MECHANICAL RESCTRICTION MAY BE PRESENT INSIDE THE TORCH • THE SPOOL BRAKE TORQUE MAY BE TOO MUCH	• CHECK THE DRIVE ROLLS FOR CORRECT PRESSURE • CHECK THE DRIVE ROLLS AND WIRE GUIDE FOR CORRECT INSTALLATION • CHECK THE TORCH LINER, REPLACE IF NECESSARY • CHECK THE SPOOL BRAKE TORQUE
THE GAS SOLENOID IS NOT ACTIVATED WHEN TRIGGER IS PRESSED, BUT ROLLS ARE TURNING	• THE GAS SOLENOID MAY BE FAULTY • THE MOTOR BOARD MAY BE FAULTY (NO POWER TO THE GAS SOLENOID)	• PERFORM THE GAS SOLENOID TEST • PERFORM THE MOTOR BOARD TEST
THE COLD INCH/GAS PURGE SWITCH DOES NOT ENABLE THE WIRE DRIVE MOTOR BUT WIRE DRIVE MOTOR IS ACTIVATED WHEN GUN TRIGGER IS PRESSED	• A MECHANICAL DAMAGE ON THE COLD INCH/PURGE SWITCH MAY BE PRESENT • CHECK FOR LOOSE OR FAULTY LEAD CONNECTIONS BETWEEN THE COLD INCH/PURGE SWITCH AND MOTOR BOARD CONNECTOR	• REPLACE THE COLD INCH/PURGE SWITCH IF NECESSARY • IF THERE IN MECHANICAL PROBLEMS AND ALL CONNECTIONS ARE OK, THE MOTOR BOARD IS DEFECT; REPLACE IT.

These tests and repair should only be performed by Lincoln Electric Factory Trained Personnel. Unauthorized repairs carried out on this equipment may result in danger to the technician and machine operator and will invalidate your factory warranty. For your safety and to avoid Electrical Shock, please observe all safety notes and precautions detailed throughout this manual.

ERROR CODES

Indicator state	Indicator Condition	Meaning
Flashing Green	Initialization	Indicates that the system is initializing after power-up or reset. Normal for first 1-10 seconds after power is turned on, or if the system configuration is changed during operation.
Alternating Green / Red	Fault condition	A system fault has been detected. Individual code digits are flashed in red with a long pause between digits. If more than one code is present, the codes will be separated by green light. Read the error code before the machine is turned off. If occurs, to clear the error try to turn Off the machine, wait for a few seconds, then turn ON again. If the error remains, a maintenance is required. Please contact the nearest authorized technical service center or Lincoln Electric and report the error code read.
Steady Red	Error / No communication	Indicates a system error or loss of communication with a connected device.

Note: If an error occurs, switch the machine OFF, wait a few seconds, and switch ON again. If the error persists, contact an authorized service center and report the displayed error code.

Table below shows the list of basic errors that can appear. To get full list of error codes, please contact with local authorize Lincoln Electric service.

Error Code	Error Description	Cause	Recommended Course of Action
6	Power source is not connected.	The User Interface cannot seem to communicate with the Power Source.	• Check cable connections between the power source and the user interface.
18	Configuration error	The machine could not properly configure the devices that are attached to it. This configuration problem could be caused by the type of devices that are connected to the machine or a required device that is not connected.	• Consult the Operators Manual for proper device configuration. • Verify all devices in the system are properly powered.
36	The machine has shut down because it has overheated.	System detected a temperature level beyond the normal system operating limit.	• Be sure process does not exceed duty cycle limit of the machine. • Check the setup for proper air flow around and through the system. • Check that the system has been properly maintained, including removal of accumulated dust and dirt from the intake and outlet louvers. When the machine has cooled down to a safe level, the interface signals this by flashing two LEDs next to Button or start welding operation by the torch trigger.

46, 54	Output current exceeded	The average value of the output current has been exceeded.	• Verify that the welding circuit does not have a short in it. • Verify stick out, wire size, and gas are correct for the process that is selected. • Decrease the value of the output parameters. • Check the weld circuit for short circuits and other leakage paths that may result in excessive current.
49	Lack of phase	Single phase input operation has been detected.	• Verify all fuses are good. • Verify all three legs of the input power are present at the input contactor. When the contactor closes, be sure all three legs are present on the output side as well (toward the rectifier). • Check the condition of the electrical system.
71	Output power exceeded	The machine detected excessive output power.	• Verify stick out, wire size, and gas are correct for the process that is selected. • Decrease the value of the output parameters. • Check the weld circuit for short circuits and other leakage paths that may result in excessive current.
81	Motor overload, long term.	The wire drive motor has overheated. Check that the electrode slides easily through the gun and cable.	• Remove tight bends from the gun and cable. • Check that the spindle brake is not too tight. • Verify the adequacy of the electrode to the welding process. • Verify a high quality electrode is being used. • Check drive rolls alignment and gears. • Wait for the error to reset and the motor to cool (approximately 1 minute).
92	No coolant flow	There is no coolant flow in the cooler after 3 seconds of welding.	• Make sure there is enough coolant in the tank and that auxiliary power is supplied. • Make sure the pump is working. When the trigger is pulled the pump should run.
262	Incompatible equipment	Required configuration could not be found in the machine. Verify the configuration and the status of the devices connected to the machine.	• Check if the connected power source is in the list of compatible power sources. Update the system with the latest firmware.

269	Arc was lost or never established	An arc was not established within the amount of time specified by setup parameter P.22 after the trigger was pulled or if the trigger remained pulled after an arc was lost. This error detection is only active in wire welding modes and is intended to prevent an electrically hot wire from being fed in the absence of an arc.	• Adjust P.22 based on weld WFS, run-in WFS, etc. if arc error detection is needed • Set P.22 to OFF if arc error detection is not needed
713	Supply overvoltage	The supply Voltage is too high	• Check the supply voltage level
714	Supply undervoltage	The supply Voltage is too low	• Check the supply voltage level.

CASE COVER REMOVAL PROCEDURE

WARNING

Service and repair should be performed only by Lincoln Electric factory trained personnel. Unauthorized repairs performed on this equipment may result in danger to the technician or machine operator and will invalidate your factory warranty. For your safety and to avoid electrical shock, please observe all safety notes and precautions detailed throughout this manual.

If for any reason you do not understand the test procedures or are unable to perform the test/repairs safely, contact your Local Lincoln Electric Service Department for electrical troubleshooting assistance before you proceed.
……

DESCRIPTION

This procedure will aid the technician in the removal and replacement of the case sheet metal cover.

MATERIALS NEEDED

- Torx T25 wrench

CASE COVER REMOVAL (continued)

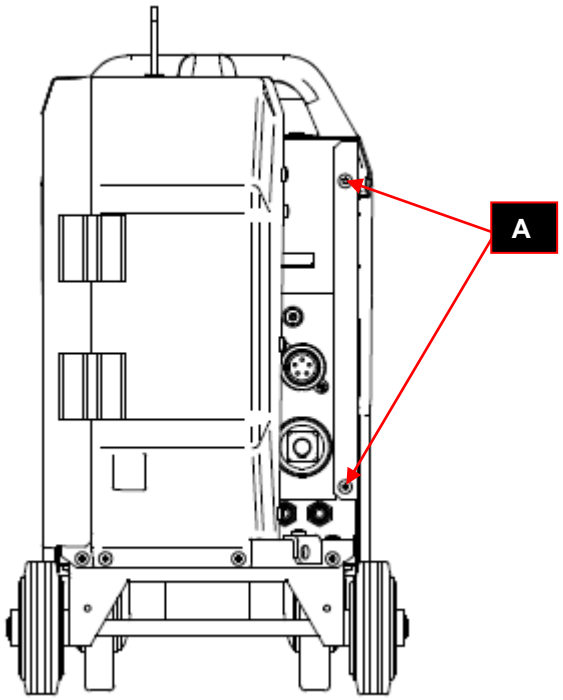

Figure 1

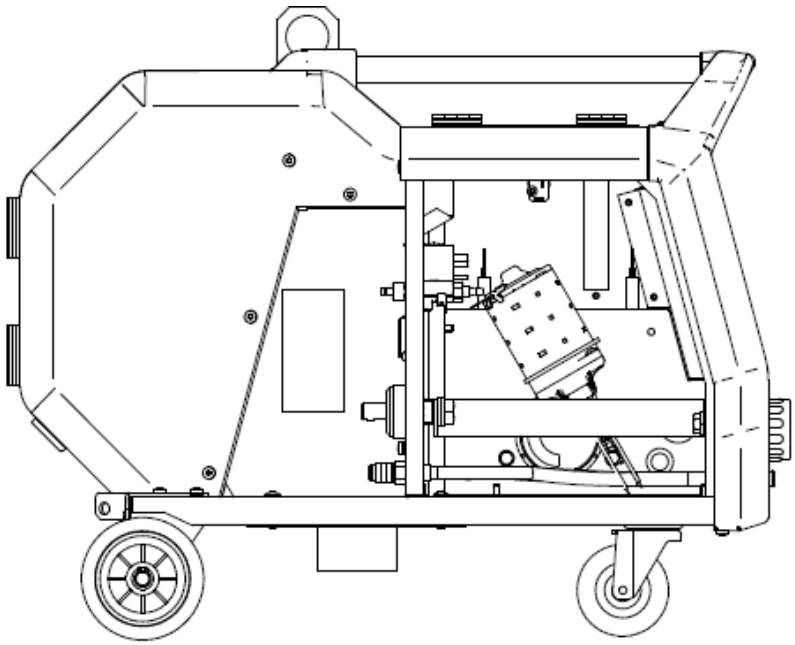

Figure 1a

Necessary tool:

- Torx T25 wrench

Procedure:

1. Turn the power source ON/OFF switch to OFF position.
2. **Disconnect Input Power from the power source !**
3. Remove the 2 screws (**A**) from the back of the left side feeder panel. **See Figure 1**
4. Slide back carefully the left side panel and disconnect all the connectors that are connected to the motor board fixed on the internal side of this panel.
5. Now you have access to the internal part of the feeder as shown in **Figure 1a**.

For the left side panel re-assembly operations, make the previous steps in the reverse order.

FEEDER MOTOR CONTROL BOARD TEST

WARNING

Service and repair should be performed by only Lincoln Electric factory trained personnel. Unauthorized repairs performed on this equipment may result in danger to the technician or machine operator and will invalidate your factory warranty. For your safety and to avoid electrical shock, please observe all safety notes and precautions detailed throughout this manual. If for any reason you do not understand the test procedures or are unable to perform the test/repairs safely, contact your Local Lincoln Electric Service Department for electrical troubleshooting assistance before you proceed.

……

TEST DESCRIPTION

This test will determine if the feeder motor control board is receiving the correct voltage and if it is working properly

MATERIALS NEEDED

Multimeter
Feeder Wiring diagrams

FEEDER MOTOR CONTROL BOARD TEST (continued)

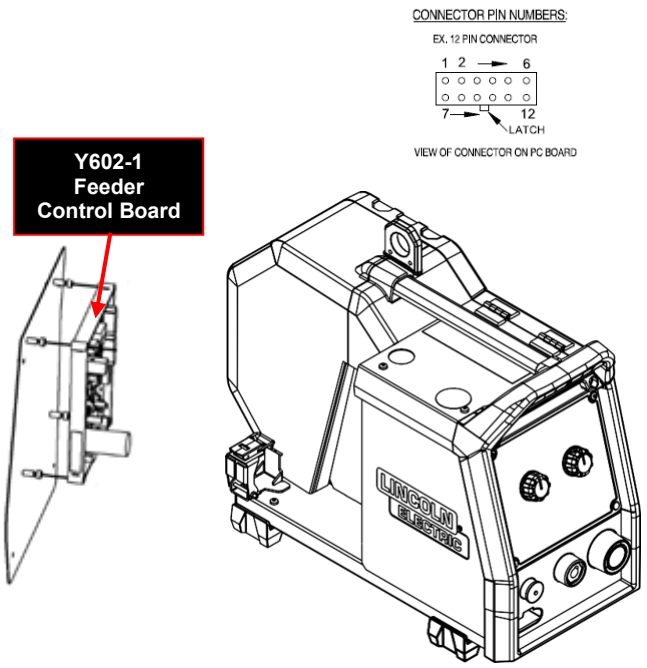

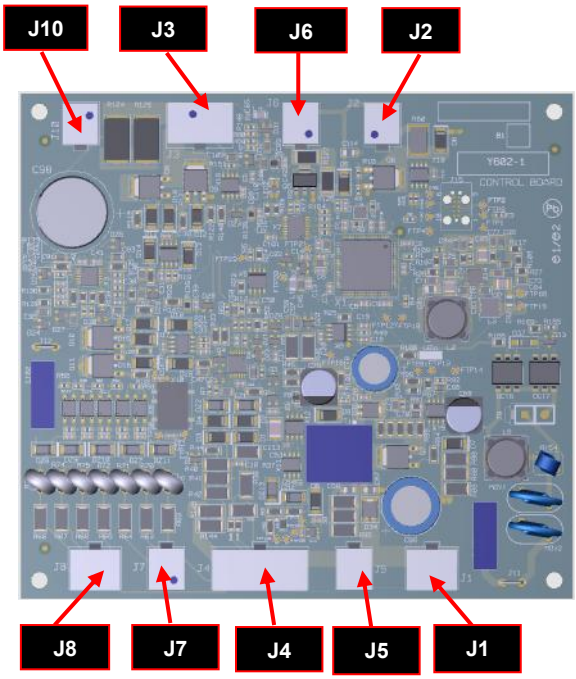

Figure 1 - Feeder Motor control board

Figure 1a – Feeder Motor Control Board Test

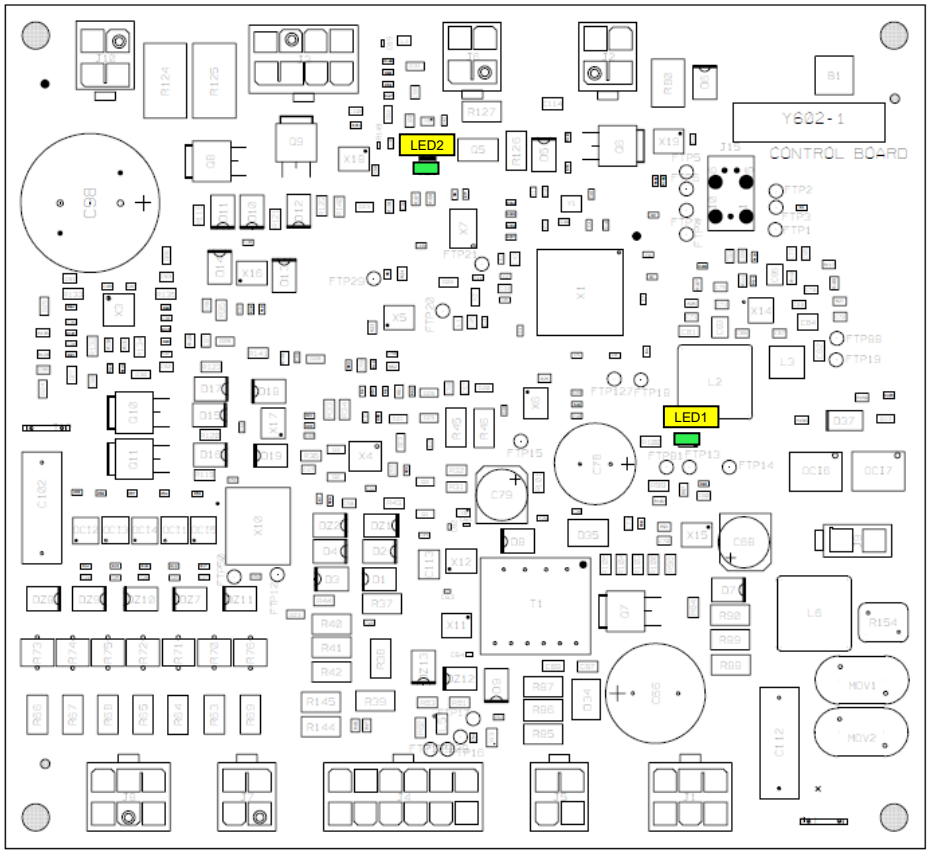

Figure 2 – LEDs location

LED 1 (green) = When lit indicates that +15Vdc is present
LED 2 (RED/GREEN) = When stady lit green indicates that machine is OK. When there is an error status red and green lits alternatively shpwing the error code number.

FEEDER MOTOR CONTROL BOARD TEST (continued)

TEST PROCEDURE

⚠ **Use always electrically insulate gloves during this test procedure**

1. Remove input power from the wire feed unit.
2. Perform the wire feeder case removal procedure.
3. Located the Feeder Motor Control Board. See **Figure 1**. Do not remove the plugs from the Motor Control Board.
4. Visually check for burned or damaged components. If any components are physically damaged the motor control board must be replaced.
5. Apply the correct input power to the wire feeder connecting it through control cable to the power source.
6. Using the multimeter perform the tests as indicated in **Test Table 1**. See **Figure 1a** for correct test points location.

J1: Feeder power supply

Pin #	Description	Value	Notes
4	Feeder Power supply from power source	+40Vdc +/- 0,1V	Power supply coming from the power source
1			

J2: Voltage Supply to Gas solenoid

Pin #	Description	Value	Notes
2	Gas solenoid power supply	+7,5 Vdc +/- 10% (at the first second the value is close to 24Vdc, after it goes to 7,5 Vdc)	This is a PWM signal and the reading can be different from multimeter to multimeter, it is recommended to use the oscilloscope to perform this test
4			

J3: Tachimeter and drive motor supply

Pin #	Description	Value	Notes
1	Drive motor power supply	From 1,5VDC to 21,5VDC	Press the gun trigger for this test. Expected reading dependent upon WFS setting
5			
3	Tachimeter supply	+5VDC	Tachimeter voltage supply
6			

J5: UI power supply

Pin #	Description	Value	Notes
4	UI Power Supply	+40Vdc +/- 0,1V	Power supply for the User Interface
3			

J6: LED module power supply

Pin #	Description	Value	Notes
2	LED module supply	+5Vdc (when LED is lit)	Power supply for the User Interface
3			

J8: Feeder Motor Board to Gas Purge/Cold inch Switch

Pin #	Description	Value	Notes
4	Cold inch	+5 Vdc +/-10%	When Gas purge switch is pressed the voltage drops to 0 (zero)
5			
6	Gas purge	+5 Vdc +/-10%	When cold inch switch is pressed the voltage drops to 0 (zero)
4			

USER INTERFACE BOARD TEST

WARNING

Service and repair should be performed by only Lincoln Electric factory trained personnel. Unauthorized repairs performed on this equipment may result in danger to the technician or machine operator and will invalidate your factory warranty. For your safety and to avoid electrical shock, please observe all safety notes and precautions detailed throughout this manual. If for any reason you do not understand the test procedures or are unable to perform the test/repairs safely, contact your Local Lincoln Electric Service Department for electrical troubleshooting assistance before you proceed.

……

TEST DESCRIPTION

This test will determine if the User Interface board is receiving the correct power supply voltage and if it is working properly. This test will not indicate if the entire board is fuctional.

MATERIALS NEEDED

Multimeter
Feed Wiring diagrams

USER INTERFACE BOARD TEST (continued)

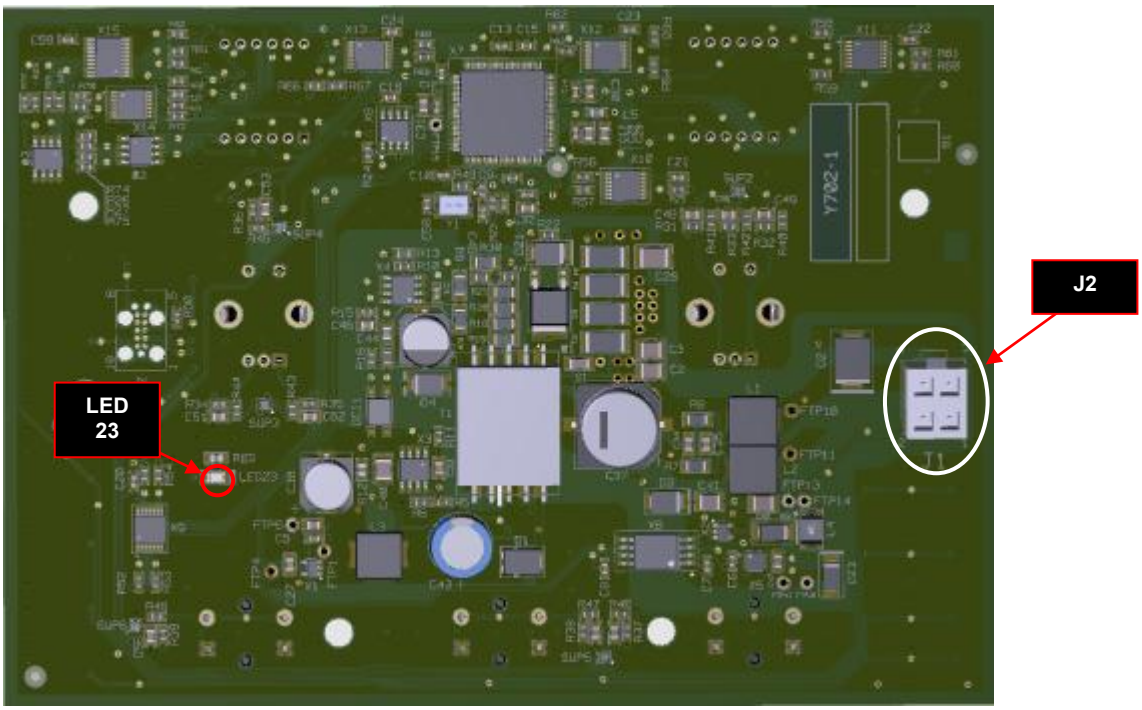

Figure 1 – PF52 User Interface component side

TEST PROCEDURE

⚠ **Use always electrically insulate gloves during this test procedure**

1. Remove input power from the wire feed unit.
2. Follow the **PF52** User Interface removal procedure available inside this manual to get access to the connector **J2.** See **Figure 1.**
3. Do not unplug the User Interface board from the Feeder. Keep it connected as indicated in **Figure 1.**
4. Visually check for burned or damaged components. If any components are physically damaged the motor control board has to be replaced.
5. Apply the correct input power to the wire feeder connecting it through control cable to the power source.
6. Locate the User Interface board connector **J1** and using the multimeter perform the tests as indicated in **Test Table 1**.

Test table 1 – PF 52 User Interface Board test

Test Points	*Expected reading*	*PCB LEDs status and color*	*Note*
J1 pin 4(+) to pin 3(-)	40VDC	-	+40VDC power supply from Control Board
-	-	LED23 Green	3,3 Vdc generated by the User Interface board is present

GAS SOLENOID TEST

WARNING

Service and repair should be performed by only Lincoln Electric factory trained personnel. Unauthorized repairs performed on this equipment may result in danger to the technician or machine operator and will invalidate your factory warranty. For your safety and to avoid electrical shock, please observe all safety notes and precautions detailed throughout this manual. If for any reason you do not understand the test procedures or are unable to perform the test/repairs safely, contact your Local Lincoln Electric Service Department for electrical troubleshooting assistance before you proceed.

……

TEST DESCRIPTION

This test will help determine if the gas solenoid is working properly.

MATERIALS NEEDED

Multimeter
Feeder Wiring diagrams

GAS SOLENOID TEST (continued)

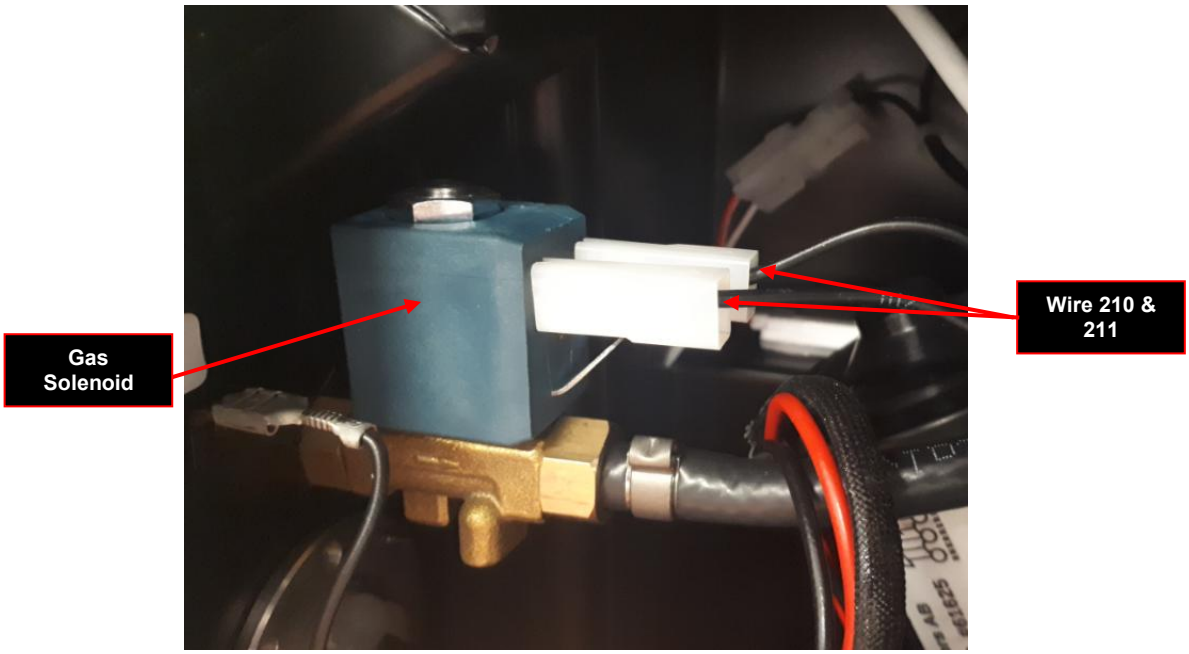

Figure 1 – Gas solenoid location

TEST PROCEDURE

⚠ **Use always electrically insulate gloves during this test procedure**

1. Remove input power from the wire feed unit.
2. Perform the wire feeder case removal procedure.
3. Located the Gas Solenoid. See **Figure 1**.
4. Apply the correct input power to the wire feeder connecting it through control cable to the power source.
5. Whit the gun trigger pressed check the supply voltage at gas solenoid terminals (wire 210 and 211). Normal voltage is about 7,5VDC (there is a 24Vdc reading just for 1 second as soon as the gas solenoid is activated, then voltage drop down to 7.5VDC). Gas solenoid is supplied with a PWM signal. If the voltage is present but the gas solenoid is not activated, the gas solenoid may be faulty. Correct coil resistance with wire 210 and 211 disconnected is 55 ohms +/- 10%
6. If Voltage is not presend check first for loose or faulty wires connections between gas solenoid and motor control board plug. See wire feeder PF52 wiring diagrams. If connections are good, the Motor Control board may be faulty.

WIRE DRIVE MOTOR TEST

WARNING

Service and repair should be performed by only Lincoln Electric factory trained personnel. Unauthorized repairs performed on this equipment may result in danger to the technician or machine operator and will invalidate your factory warranty. For your safety and to avoid electrical shock, please observe all safety notes and precautions detailed throughout this manual. If for any reason you do not understand the test procedures or are unable to perform the test/repairs safely, contact your Local Lincoln Electric Service Department for electrical troubleshooting assistance before you proceed.

……

TEST DESCRIPTION

This test will help determine if the wire drive motor receives the correct voltage and if it is capable of working properly.

MATERIALS NEEDED

Multimeter
Feeder Wiring diagrams

WIRE DRIVE MOTOR TEST (continued)

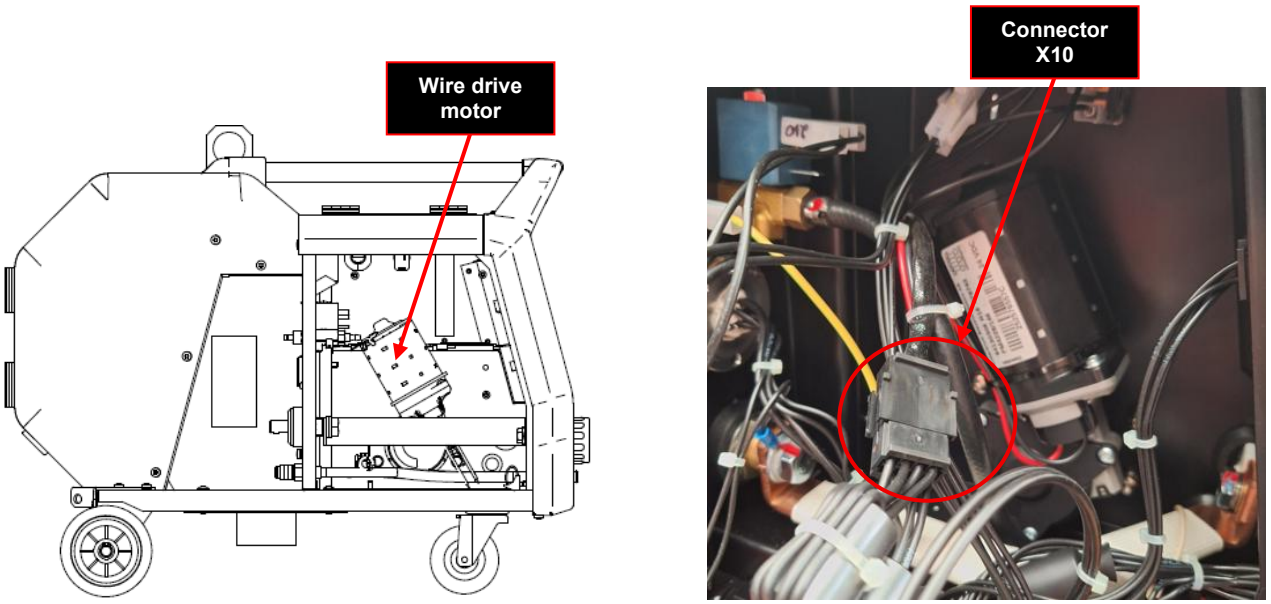

Figure 1 – Wire drive motor and connector location

TEST PROCEDURE

⚠ **Use always electrically insulate gloves during this test procedure**

1. Remove input power from the wire feed unit.
2. Perform the wire feeder case removal procedure taking care of do not disconnect the Motor Control board harnesses.
3. Located the wire drive motor. See **Figure 1**.
4. Apply the correct input power to the wire feeder connecting it through control cable to the power source.
5. Press the gun trigger and with the motor running check at connector **X10** between pin 7 (wire288_Neg) and pin 8 (wire 289_Pos), see **Figure 1**, for approximately 1,5VDC to 21,5VDC. Reading depends upon Run-in WFS setting on user interface panel.
6. If Voltage is not presend check first for loose or faulty wires connections between motor control board plug and motor plug. See wire feeder wiring diagrams. If connections are good, the Motor Control board may be faulty.
7. If voltage is present but the wire drive motor does not run, the motor may be faulty.
8. If changing the WFS potentiometer setting on user interface the motor does not change the speed, perform the motor control board test and tachimeter test.

WIRE DRIVE MOTOR TACHOMETER TEST

WARNING

Service and repair should be performed by only Lincoln Electric factory trained personnel. Unauthorized repairs performed on this equipment may result in danger to the technician or machine operator and will invalidate your factory warranty. For your safety and to avoid electrical shock, please observe all safety notes and precautions detailed throughout this manual. If for any reason you do not understand the test procedures or are unable to perform the test/repairs safely, contact your Local Lincoln Electric Service Department for electrical troubleshooting assistance before you proceed.

……

TEST DESCRIPTION

This test will help determine if the tachimeter is correctly supplied by the motor control board and if the tachometer is sending the correct feedback to the motor control board.

MATERIALS NEEDED

Multimeter
Feeder Wiring diagram

WIRE DRIVE MOTOR TACHOMETER TEST (continued)

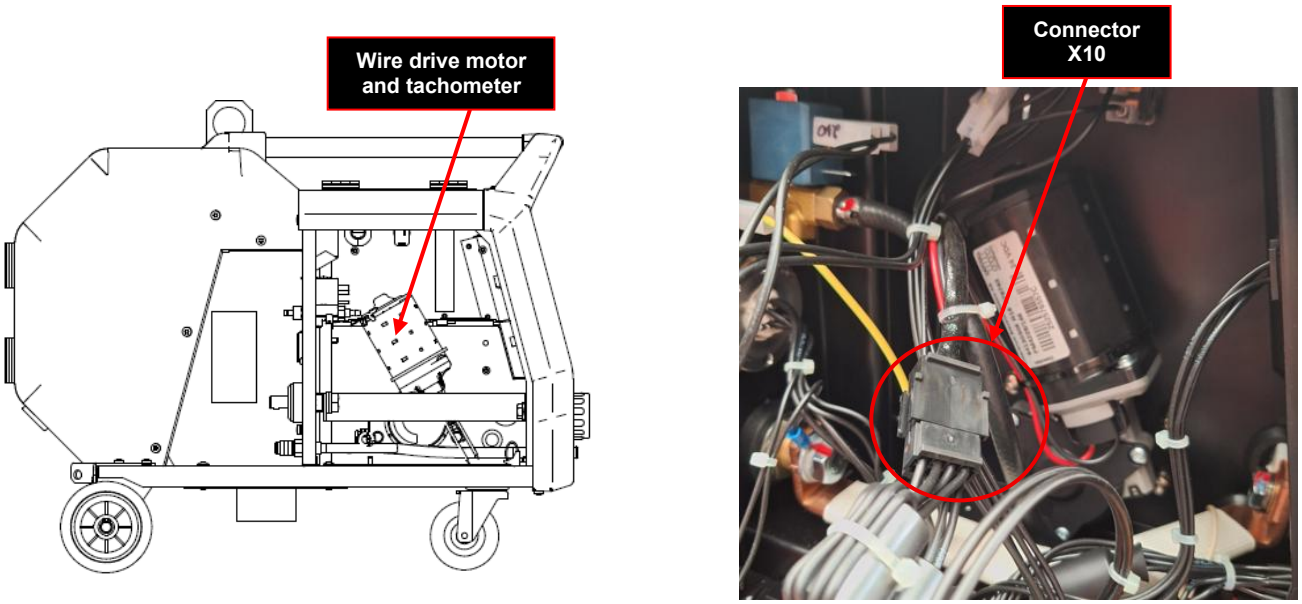

Figure 1 – Wire drive motor and connector location

TEST PROCEDURE

⚠ **Use always electrically insulate gloves during this test procedure**

1. Remove input power from the wire feed unit.
9. Perform the wire feeder case removal procedure taking care of do not disconnect the Motor Control board harnesses.
2. Located the wire drive motor. See **Figure 1**.
3. Apply the correct input power to the wire feeder connecting it through control cable to the power source.
4. Check at connector **X10** between pin 3 (wire 285) and pin 5 (wire 282), see wirng diagrams, for approximately 5 VDC. If the 5VDC is missing check for loss or faulty connection between connector **X10** and Motor Control board. If connections are good, maybe the Motor Control board is faulty.
5. With the trigger pressed and the motor running check at connector **X10** the tachometer feedback voltage between pin 5 (wire 282) and pin 4 (wire 286) and between pin 5 (wire 282) and pin 2 (wire 290). Normal feedback value should be about 2,5VDC.
6. If the correct 5 VDC supply is present, but the voltage feedback is missing (when motor is running), the tachometer is faulty.
7. With the motor not running the tachimeter voltage feedback may be 0VDC or 5VDC depending on the position where the tachimeter magnet, mounted on the motor axle, has stopped.

DISASSEMBLY OPERATIONS

MOTOR CONTROL BOARD REMOVAL AND REPLACEMENT PROCEDURE

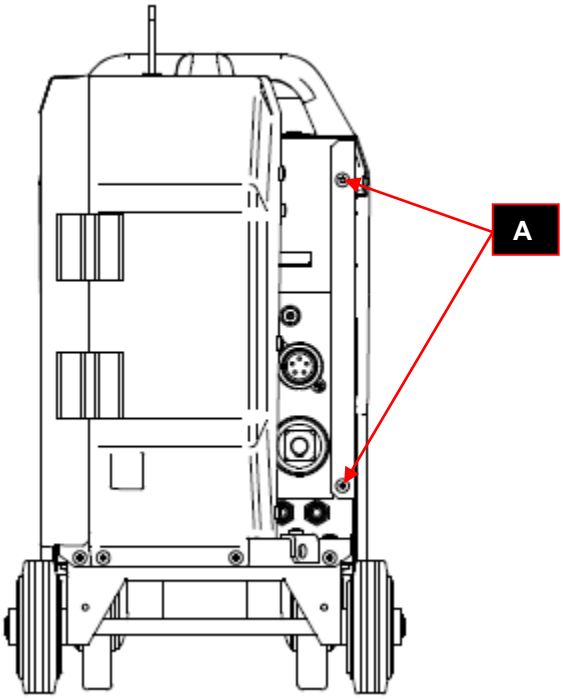

Figure 1

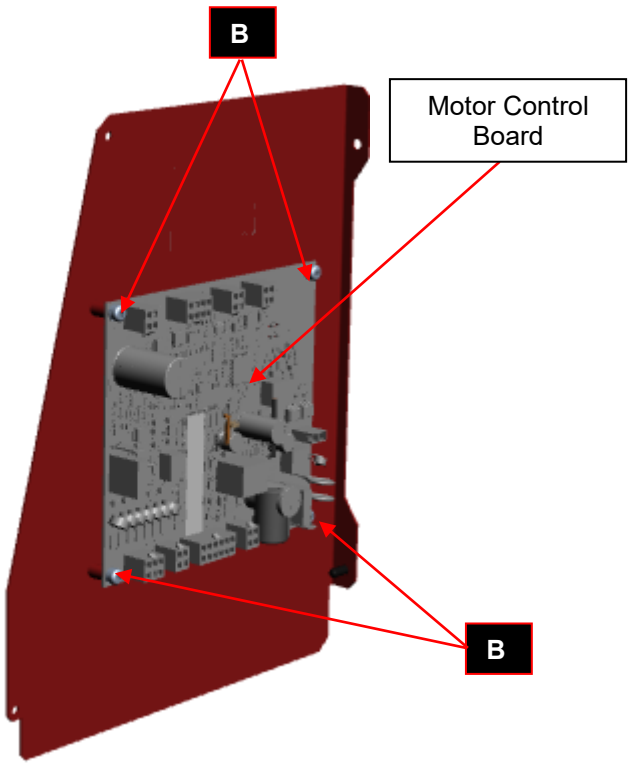

Figure 2 – Motor Control boards location

REMOVAL PROCEDURE

Necessary tools:

- Torx T20 wrench

1. Turn the power source ON/OFF switch to OFF position.
2. **Disconnect Input Power from the power source !**
3. Using the TORX T20 wrench remove the 2 screws (**A**) from the back of the left side feeder panel. **See Figure 1**
4. Slide back, carefully, the left side panel. Locate the motor control board. **See Figure 2**
5. Unplug, from the Motor Control Board, all the connectors
6. Using TORX T20 wrench remove the 4 screws (**B**) from the motor control board corners.
7. Carefully remove the Motor Control board from wire feeder left side panel.
8. **For the new Motor Control board re-assembly operations,** make the previous steps in the reverse order

DISASSEMBLY OPERATIONS (continued)

WIRE DRIVE MOTOR AND WIRE DRIVE PLATE REMOVAL AND REPLACEMENT PROCEDURE

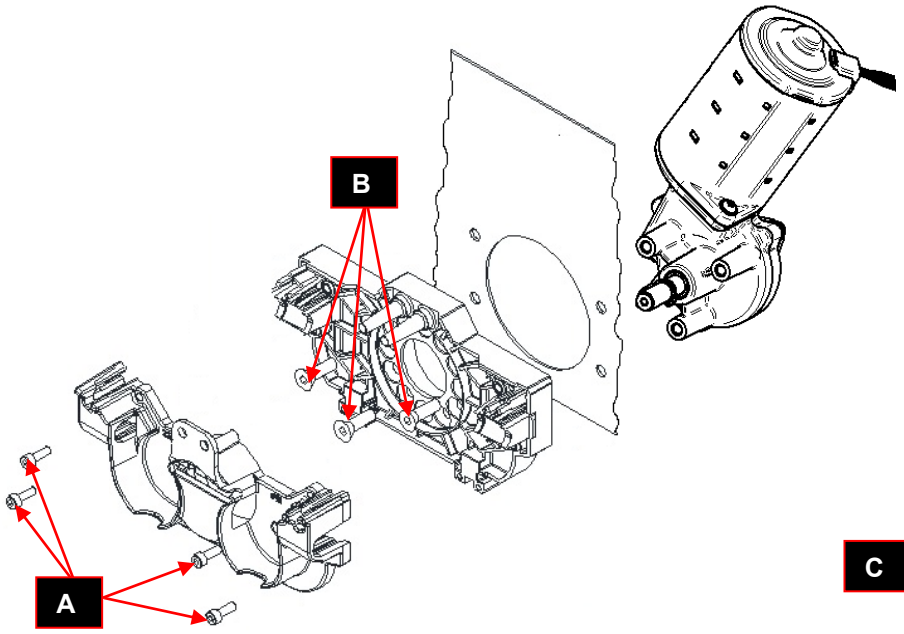

Figure 1

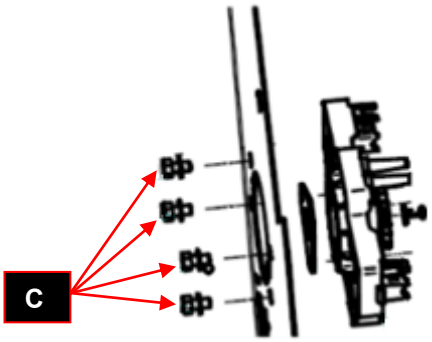

Figure 1a

REMOVAL PROCEDURE

Necessary tools:

- Screwdriver type PH02
- 3 mm allen wrench
- Torx T30

1. Remove main input power from the Wire Feeder.
2. Perform the wire feeder left panel removal procedure disconnecting completely the harnesses from the Motor Control Board
3. Remove the drive rolls from the wire drive
4. Remove the bottom rolls gear wheels.
5. Using the 3 mm allen wrench remove the 4 screws (**A**). See **Figure 1**.
6. Remove the half part of the wire drive plate.
7. Remove the cental motor gear wheel.
8. Unplug motor connectors **X10**.
9. Using the PH02 screwdriver remove the 3 screws (**B**), that are fixing the motor to the wire drive. See **Figure 1**.
10. Remove carefully the motor from the Wire Feeder.
11. Using the T30 wrench remove the 4 screws (**C**). **See Figure 1a**.
12. Remove the last half of the wire drive plate from the divider panel.
13. **For the new Motor and Wire Drive plate re-assembly operations,** make the previous steps in the reverse order

DISASSEMBLY OPERATIONS (continued)

USER INTERFACE BOARD REMOVAL AND REPLACEMENT PROCEDURE

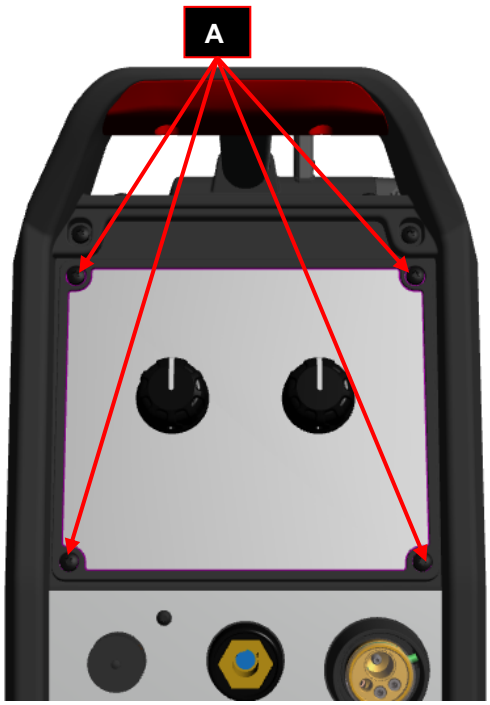

Figure 1

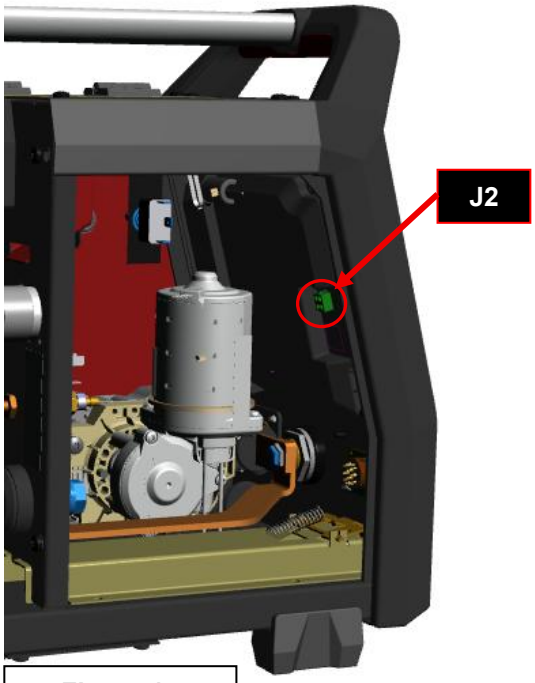

Figure 1a

REMOVAL PROCEDURE

Necessary tools:

- 2 mm allen wrench
- Torx T25
- 13mm wrench

1. Remove main input power from the Wire Feeder.
2. Using the Torx T25 screwdriver remove the 4 screws (**A**) that are fixing the User Interface assembly to the Feeder. See **Figure 1**
3. Disconnect the harness from connector **J2**. See **Figure 1a**
4. **For the new User Interface re-assembly operations,** make the previous steps in the reverse order

DISASSEMBLY OPERATIONS (continued)

GAS VALVE REMOVAL AND REPLACEMENT PROCEDURE

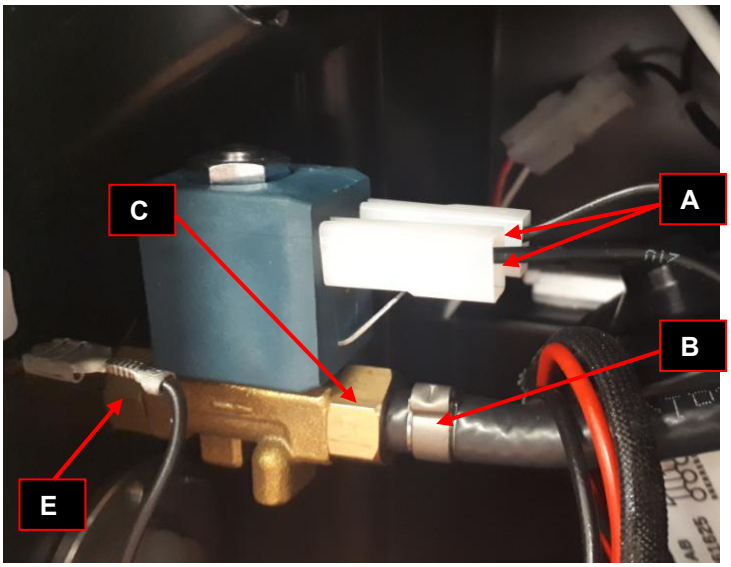

Figure 1



Figure 2

REMOVAL PROCEDURE

Necessary tools:

- 14mm wrench
- Pincers
- Metal clip 10,5 GER (part number 0656-790-105R)
- Threadlocker liquid

1. Remove main input power from the Wire Feeder.
2. Perform the wire feeder case removal procedure.
3. Disconnect the two gas valve supply leads n° 210 and 213 (**A**).
4. Using the pincers remove the metal clip (**B**) and using the 14mm wrench unscrew the couple (**C**). See **Figure 1.**
5. Using the 14 mm wrench remove the quick connect coupling (**D**), see **Figure 2,** and remove the gas valve from the wire feeder.
6. Using the 14mm wrench unscrew the couple (**E**)

For the new gas valve re-assembly operations, make the previous steps in the reverse order, using treadlocker liquid on couple thread (**C**), (**E**) and quick connect coupling thread (**D**).

ELECTRICAL SCHEMATICS

Schematic Diagram: PF 52

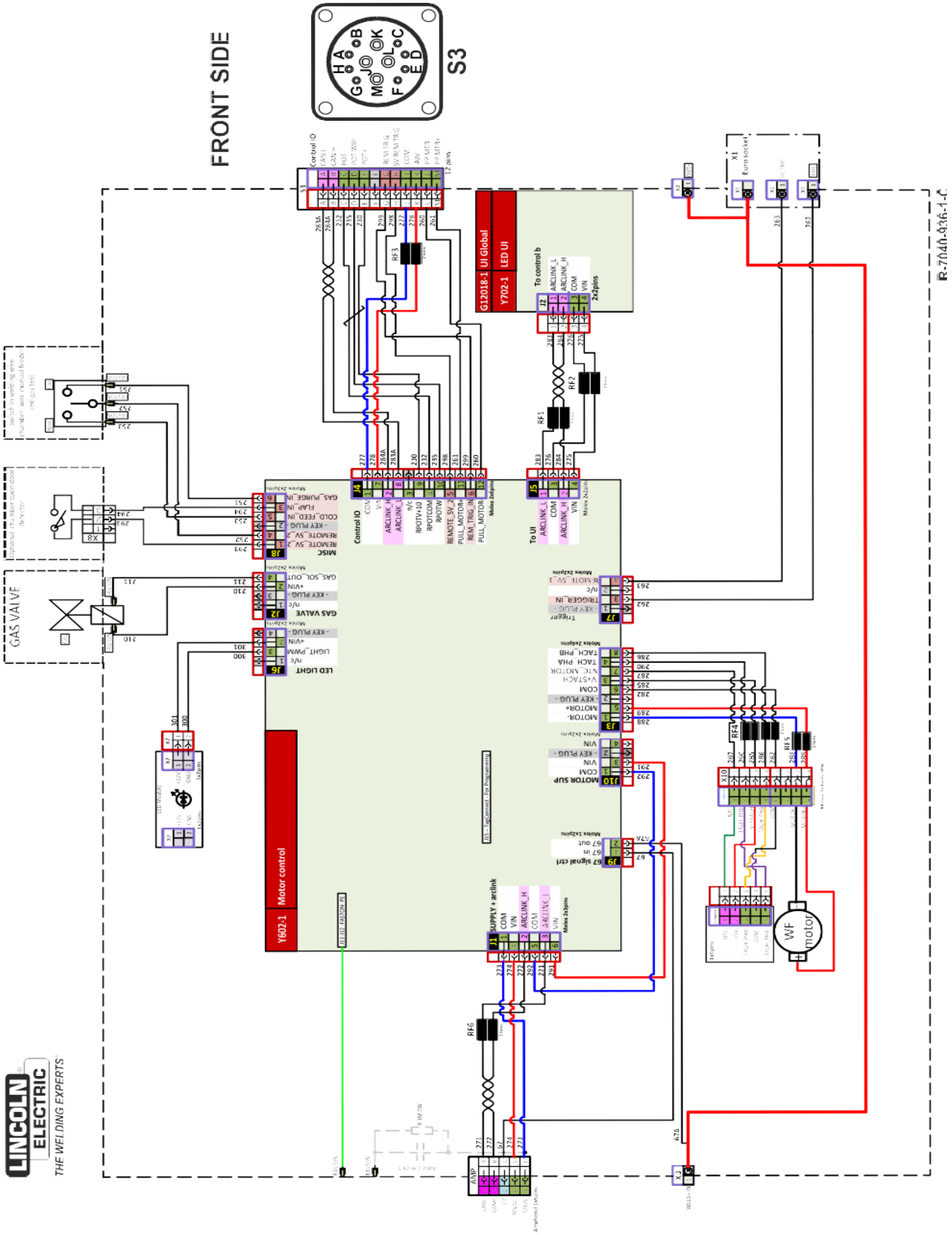

NOTE

Lincoln Electric Europe