IM3224
07/2026
REV00

PF 52 WIRE FEEDER

Spare Parts....1
Figure A: Machine Assembly....2
Figure B: Partition Assembly....3
Figure C: Wire Drive Assembly....4
Figure D: Front Assembly....5
Figure E: Back Panel....6
Miscelaneous Items (not shown in figure A, B, C, D, E)....6
Electrical Schematic....7
CODE: 50764....7

Lincoln Electric Bester Sp. z o.o.
ul. Jana III Sobieskiego 19A, 58-260 Bielawa, Poland
www.lincolnelectric.eu

ISO OERLIKON AG Schweisstechnik
CH-5737 Menziken AG – Tel. +41 (0)62 771 83 05
E-Mail info@iso-oerlikon.ch – www.iso-oerlikon.ch

Spare Parts

SP50764 REV00
07/2026

ASSEMBLY PAGE NAME			Machine Assembly	Partition Assembly	Wire Drive Assembly	Front Assembly	Back Panel	Miscellaneous Items
CODE NO.:	**K NO.:**	**FIGURE NO.:**	**A**	**B**	**C**	**D**	**G**	
50764	K14462-1	PF 52 WIRE FEEDER	1	1	1	1	1	1

*items highlighted in bold are recommended spare parts

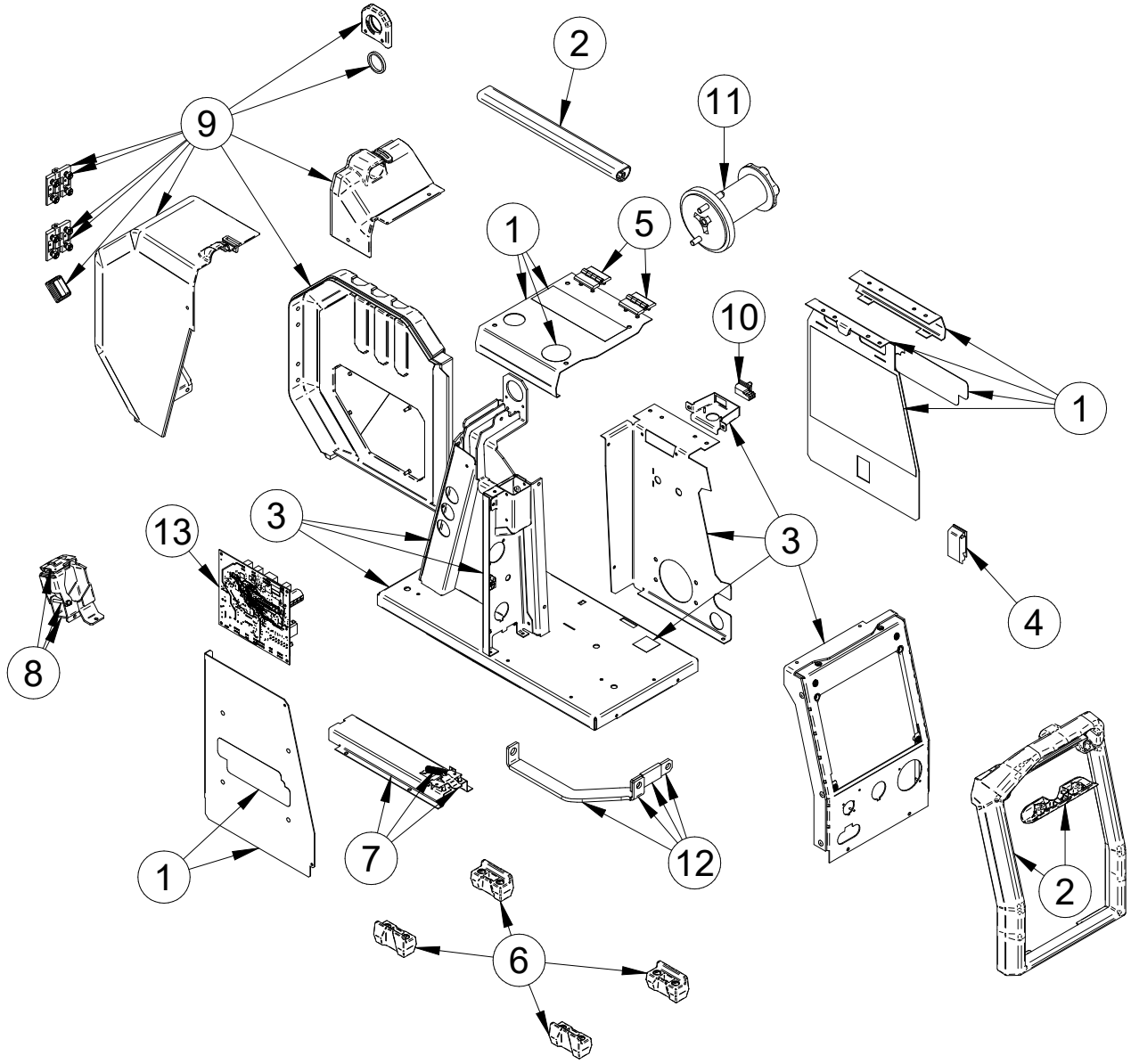

Figure A

Figure A: Machine Assembly

Item	Description	Part Number	QTY	1	2	3	4	5	6	7
1	SIDE PANEL KIT includes:	T-8040-723-1R	1							
	SIDE PANEL		1							
	LINCOLN ELECTRIC LABEL		2							
	COVER		1							
	STICKER WARANTY LABEL		1	X						
	WARNING STICKER		1							
	LABEL		1							
	SIDE PANEL		1							
	COVER		1							
2	FRONT PANEL FRAME KIT includes:	T-8040-724-1R	1							
	FRONT PANEL		1	X						
	RED INSERT		1							
	HANDLE		1							
3	BASE, PARTITION, SHELF KIT includes:	T-8040-725-1R	1							
	FRAME ASSEMBLE		1							
	BRACKET		1							
	BRACKET ASSEMBLE		1	X						
	FRONT PANEL ASSEMBLE		1							
	BRACKET		1							
	LABEL		1							
	LABEL		1							
4	DOOR LATCH PT,LF	0654-610-004R	1	X						
5	LEAF HINGE	0654-610-007R	2	X						
6	RUBBER FOOT	R-0010-936-1R	4	X						
7	WATER HOSES GUIDE KIT includes:	T-8040-726-1R	1							
	COVER		1	X						
	SPRING		1							
	BRACKET		1							
8	CABLE CLAMP ASSEMBLY	R-8040-544-1R	1	X						
9	PLASTIC COVER KIT includes:	T-8040-120-1R	1							
	SPOOL BACKPLATE		1							
	RIBBED RECTANGULAR INSERT		1							
	SPOOL TOPPLATE		1							
	BRACKET HOLDER COVER		1	X						
	RING		1							
	HINGE 50x50		2							
	NUT M6 SELF LOCKING		8							
	FEEDER DOOR		1							
10	SWITCH D3D-133	1115-280-008R	1	X						
11	REEL HUB STANDARD	0744-000-192R	1	X						
12	COPPER BAR KIT includes:	T-8040-727-1R	1							
	COPPER BAR		1	X						
	COPPER BAR		1							
	SYNSLEEVE Ø 18									
13	**CONTROL BOARD**	**R-6042-161-1R**	**1**	**X**						

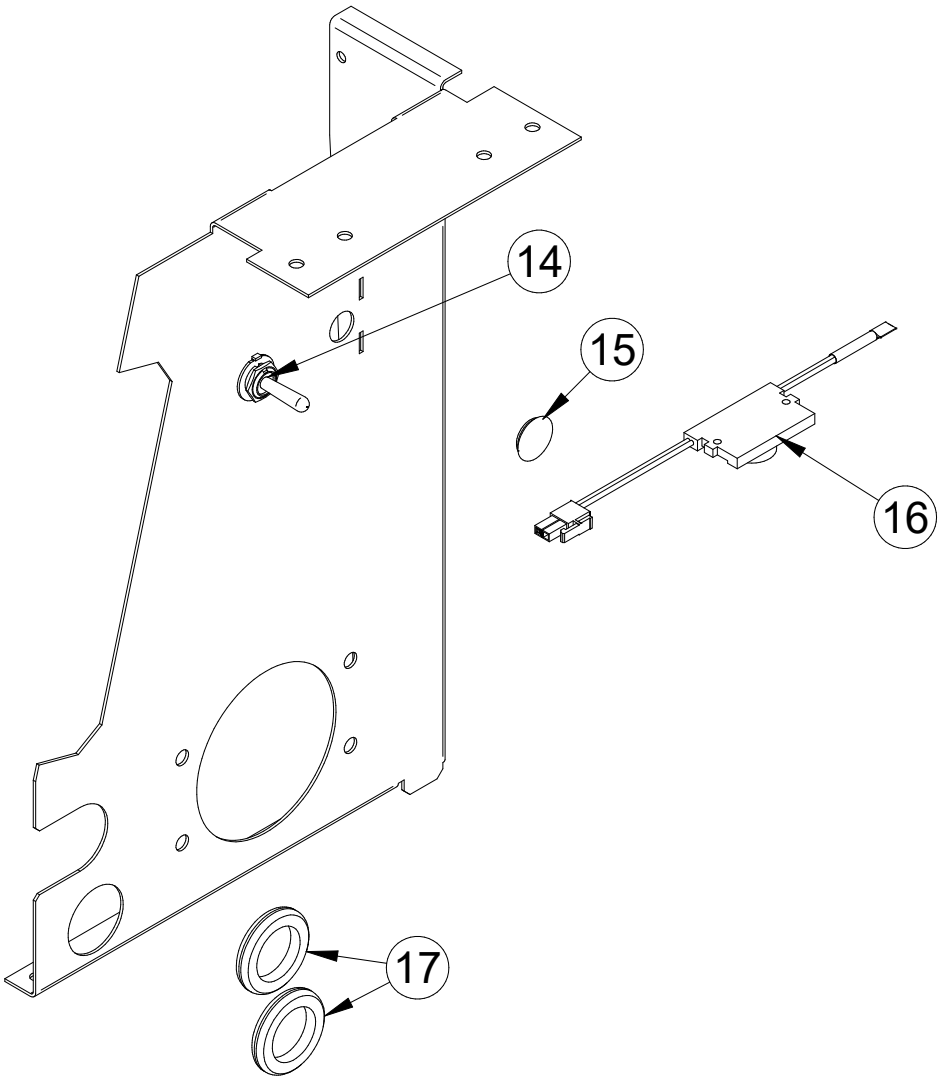

Figure B

Figure B: Partition Assembly

Item	Description	Part Number	QTY	1	2	3	4	5	6	7
14	TOGGLE SWITCH HY29J	1115-280-004R	1	X						
15	STOPPER TZ8	1119-510-005R	1	X						
16	LED LAMP	R-5041-735-1R	1	X						
17	PROTECTION RUBBER COVER ADG-30	1361-599-198R	2	X						

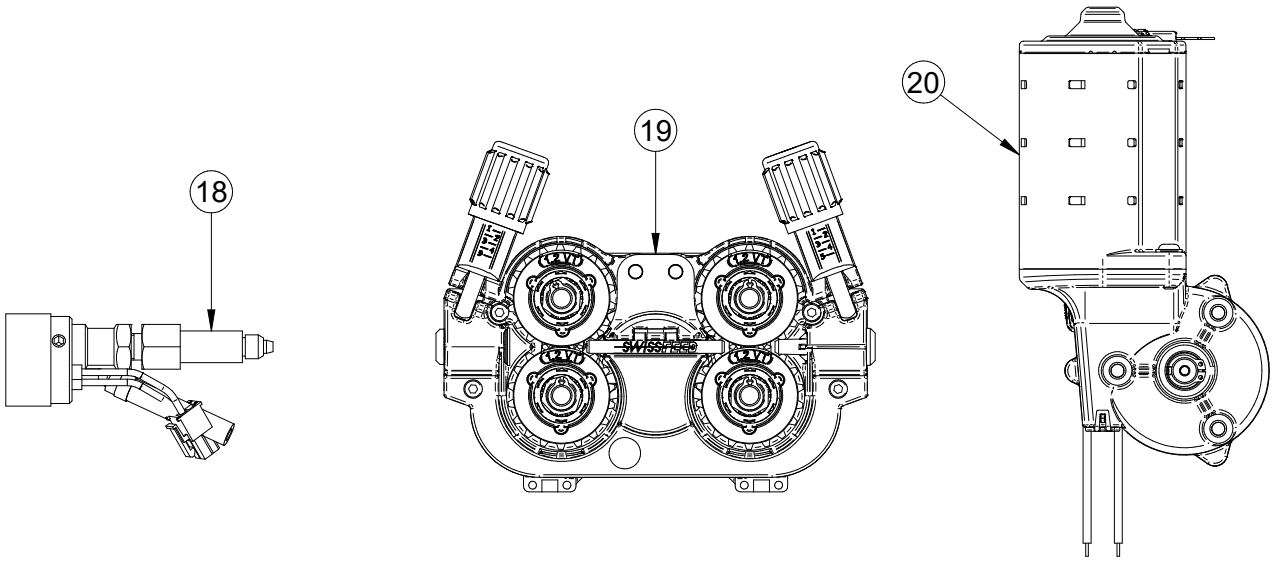

Figure C

Figure C: Wire Drive Assembly

Item	Description	Part Number	QTY	1	2	3	4	5	6	7
18	EURO SOCKET	R-8040-539-1R	1	X						
19	WIRE FEED SYSTEM	0744-000-009R	1	X						
20	WIRE MOTOR	1111-722-051R	1	X						

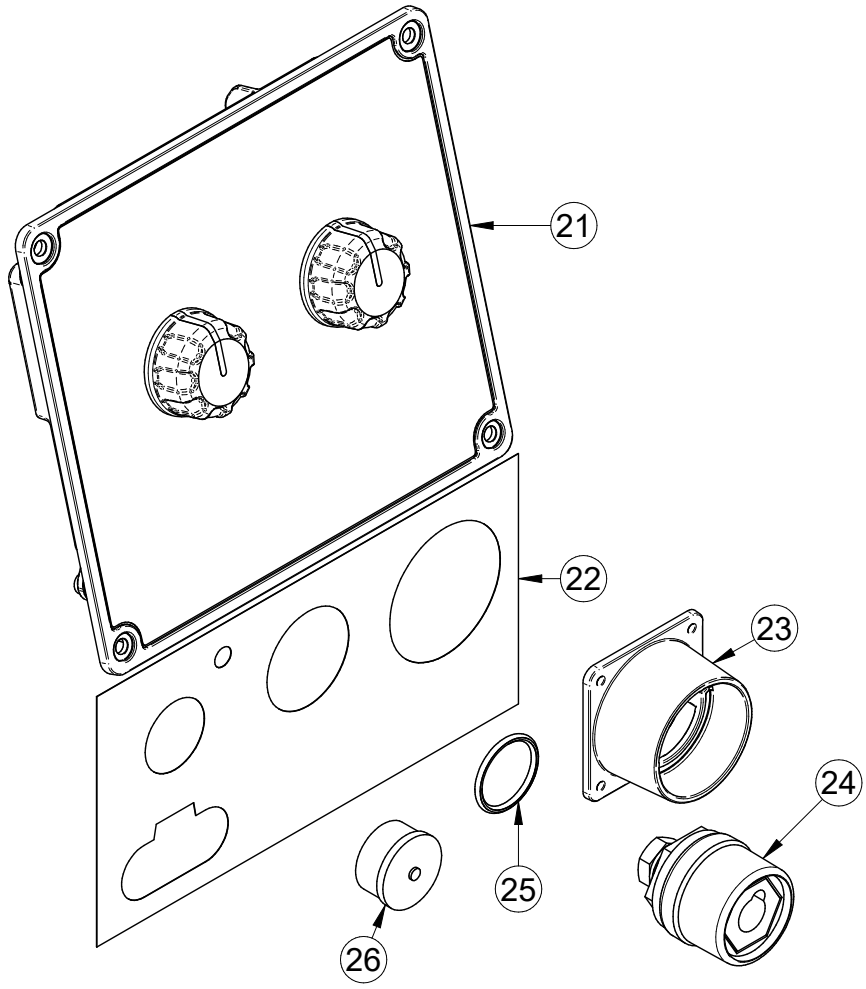

Figure D

Figure D: Front Assembly

Item	Description	Part Number	QTY	1	2	3	4	5	6	7
21	CASE ASSEMBLY SIMPLE UI	R-8040-545-1R	1	X						
22	BOTTOM DECAL	R-0000-531-1R	1	X						
23	EURO CONNECTOR HOUSING	R-0000-528-1R	1	X						
24	SOCKET X2, X3, X4	90000595PR	1	X						
25	SEALING RING ON 25X2,5 W116	1373-182-003R	1	X						
26	CONNECTOR COVER	1158-641-159R	1	X						

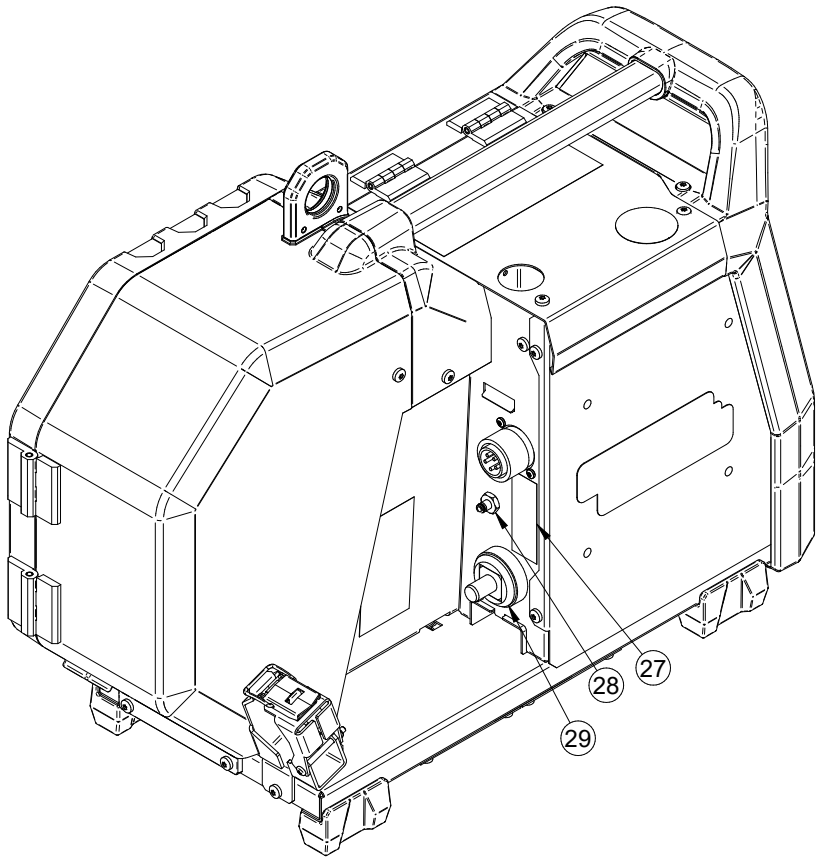

Figure E

Figure E: Back Panel

Item	Description	Part Number	QTY	1	2	3	4	5	6	7
27	REAR DECAL	R-0000-537-1R	1	X						
28	SOLENOID VALVE KIT	T-8040-235-1R	1	X						
29	SOCKET	D-2985-002-1R	1	X						

Miscelaneous Items (not shown in figure A, B, C, D, E)

Item	Description	Part Number	QTY	1	2	3	4	5	6	7
30	HARNESS KIT	T-8040-728-1R	1	X						

Electrical Schematic

CODE: 50764

