IM3221
07/2026
REV00

SPEEDTEC 400S Gen4
SPEEDTEC 500S Gen4

Spare Parts....1
Figure A: Machine Assembly....2
Figure B: Inside Machine Assembly....4
Figure C: Front Assembly....5
Figure D: Rear Assembly....6
Miscellaneous Items (not shown in figure A, B, C, D)....6
Electrical Schematic....7
CODE: 50781, 50782....7

LINCOLN® ELECTRIC

ISO OERLIKON

ISO OERLIKON AG Schweisstechnik
CH-5737 Menziken AG – Tel. +41 (0)62 771 83 05
E-Mail info@iso-oerlikon.ch – www.iso-oerlikon.ch

Spare Parts

SP50781, SP50782 REV00
07/2026

ASSEMBLY PAGE NAME			Machine Assembly	Machine Assembly	Machine Assembly	Miscellaneous Items		
CODE NO.:	**K NO.:**	**FIGURE NO.:**	**A**	**B**	**C**	**-**		
50781	K14457-1	SPEEDTEC 400S Gen4	1	1	1	1		
50782	K14458-1	SPEEDTEC 500S Gen4	2	2	2	2		

*items highlighted in bold are recommended spare parts

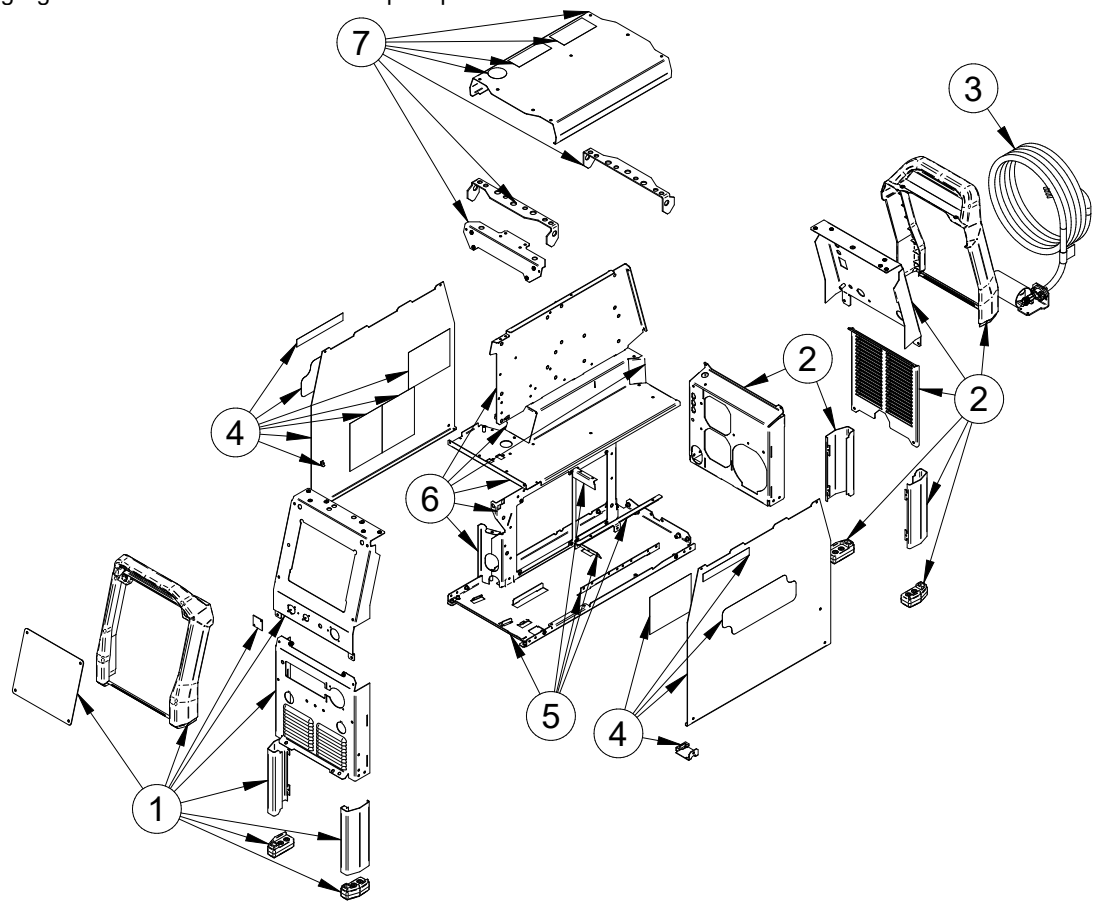

Figure A

Figure A: Machine Assembly

Item	Description	Part Number	QTY	1	2	3	4	5	6	7
1	FRONT PANEL KIT includes:	T-8040-262-1R	1							
	FRONT PANEL ASSEMBLY		1							
	LOWER FRONT PANEL ASSEMBLY		1							
	COVER		2							
	FOOT		1	X	X					
	FOOT		1							
	FRONT HANDLE CASE		1							
	COVER		1							
	COVER		1							
2	REAR PANEL KIT includes:	T-8040-263-1R	1							
	TOP REAR PANEL ASSEMBLY		1							
	COVER BACK		1							
	FAN BRACKET		1							
	COVER		2	X	X					
	FOOT		1							
	FOOT		1							
	FRONT HANDLE CASE		1							
3	POWER LEAD	R-5041-723-1R	1	X	X					
4	SIDE PANEL KIT includes:	T-8040-264-1R	1							
	SIDE PANEL ASSEMBLY		2							
	LINCOLN ELECTRIC LABEL		2							
	SPEEDTEC LABEL		2	X	X					
	FAST TERMINALS		2							
	ADHESIVE FOR INSULATION ELECTRIC		4							
	BRACKET		1							
5	BASE PANEL KIT includes:	T-8040-265-1R	1							
	BASE ASSEMBLY		1							
	BRACKET		1							
	BRACKET		1	X	X					
	COVER		1							
	BRACKET		1							
6	PARTITION, SHELF KIT includes:	T-8040-266-1R	1							
	PARTITION		1							
	PARTITION ASSEMBLY		1							
	SHELF ASSEMBLY		1	X	X					
	COVER		1							
	BRACKET		1							
	PARTITION ASSEMBLY		1							
7	COVER KIT includes:	T-8040-267-1R	1							
	BRACKET ASSEMBLY		1							
	BRACKET		2							
	TOP COVER ASSEMBLY		1	X	X					
	LABEL 3 YEAR WARRANTY		1							
	WARNING LABEL		1							
	WARNING LABEL		1							
	FAST TERMINALS		1							

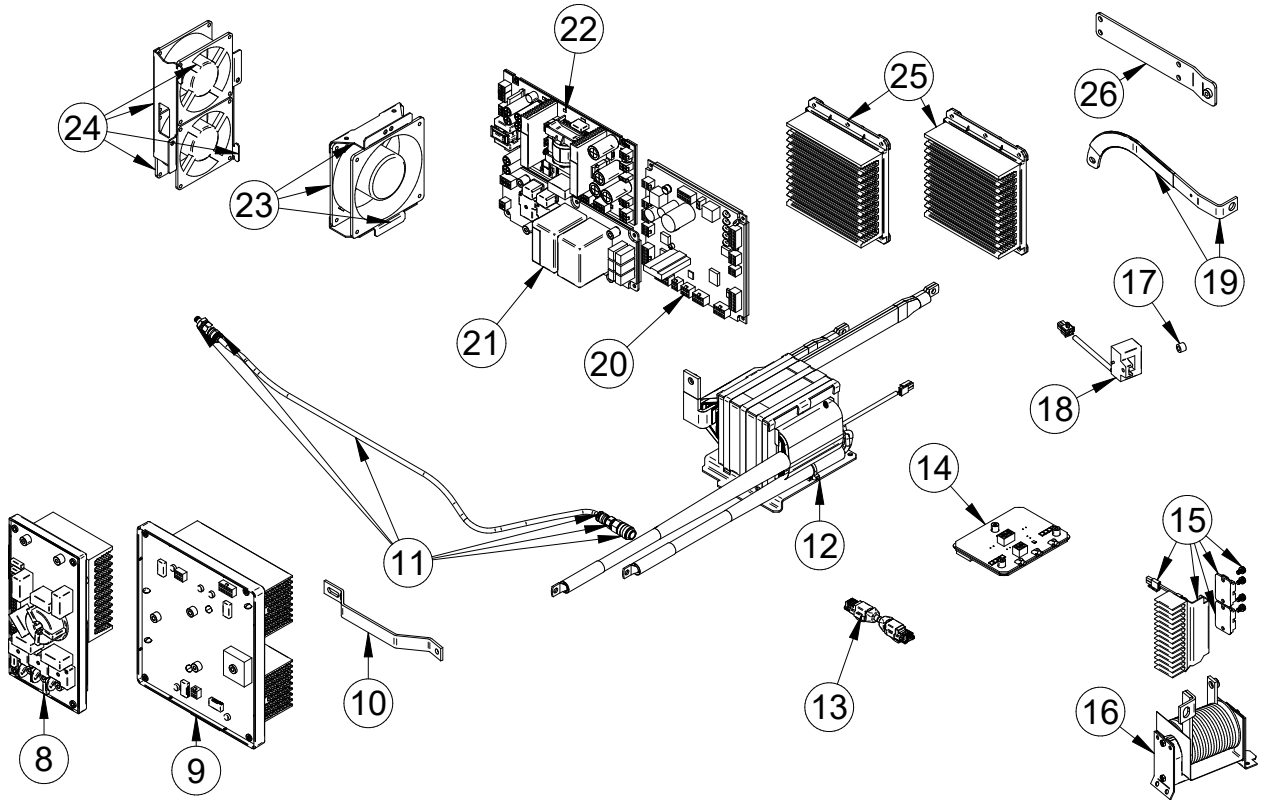

Figure B

Figure B: Inside Machine Assembly

Item	Description	Part Number	QTY	1	2	3	4	5	6	7
8	**INPUT FILTER**	**R-6042-155-1R**	1	X	X					
9	**INVERTER BOARD**	**R-6042-158-1R**	1	X	X					
10	COPPER BAR	R-1212-641-1R	1	X	X					
11	GAS CONNECTION KIT includes:	T-8040-268-1R	1	X	X					
	POLYURETHANE TUBE D.INT		1							
	STRAIGHT CONNECTION HOSSE		2							
	PLUG FOR QUICK CONNECTOR		1							
	QUICK CONNECTOR		1							
12	TRANSFORMER	R-4034-194-1R	1	X	X					
13	NETWORK CABLE U/UTP	1125-123-105R	1	X	X					
14	**OUTPUT FILTER**	**R-6042-159-1R**	1	X	X					
15	RESISTOR PRELOAD KIT includes:	T-8040-269-1R	1	X	X					
	RESISTOR		2							
	HEATSINK		1							
	BRACKET		1							
	THERMOCOUPLE		1							
	SCREWS		4							
16	CHOKE	R-0000-519-1R	1	X	X					
17	SUPPORT RIG	00373004PR	1	X	X					
18	CURRENT SENSOR	R-8040-543-1R	1	X	X					
19	COPPER BAR KIT includes:	T-8040-270-1R	1	X	X					
	COPPER BAR		1							
	INSULATION SLEEVE		1							
20	**CONTROL BOARD**	**R-6042-151-1R**	1	X						
20	**CONTROL BOARD**	**R-6042-151-2R**	1		X					
21	**DC-LINK CAPASITOR BANK**	**R-6042-157-1R**	1	X	X					
22	**AUXILARY POWER SUPPLY**	**R-6042-156-1R**	1	X	X					
23	FAN KIT includes:	T-8040-271-1R	1	X	X					
	FAN		1							
	BRACKET		1							
	BRACKET		1							
24	FAN KIT includes:	T-8040-271-2R	1	X	X					
	FAN		2							
	BRACKET		2							
25	**OUTPUT BRIDGE**	**Y803-1R**	2	X	X					
26	COPPER BAR	R-3016-172-1R	1	X	X					

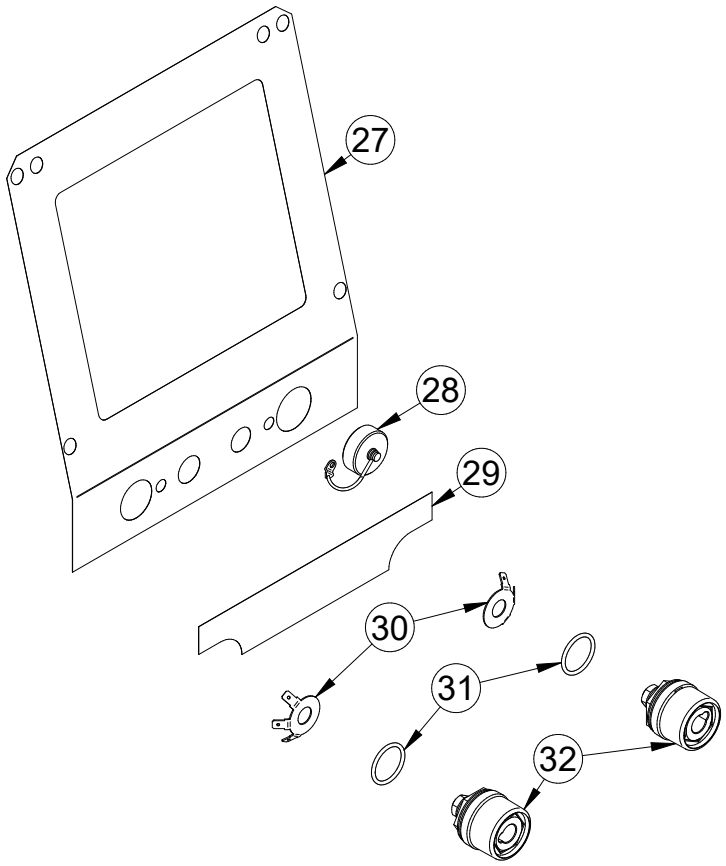

Figure C

Figure C: Front Assembly

Item	Description	Part Number	QTY	1	2	3	4	5	6	7
27	FRONT PANEL DECAL	R-0000-532-1R	1	X						
27	FRONT PANEL DECAL	R-0000-532-2R	1		X					
28	PROTECTION COVER PLUG AMP	1158-641-128R	1	X	X					
29	BOTTOM PANEL DECAL	R-0000-533-1R	1	X	X					
30	LANGUETTE MULTIPLE	90000940PR	2	X	X					
31	SEALING RING ON 25X2,5	1373-182-003R	2	X	X					
32	SOCKET X2, X3, X4	90000595PR	2	X	X					

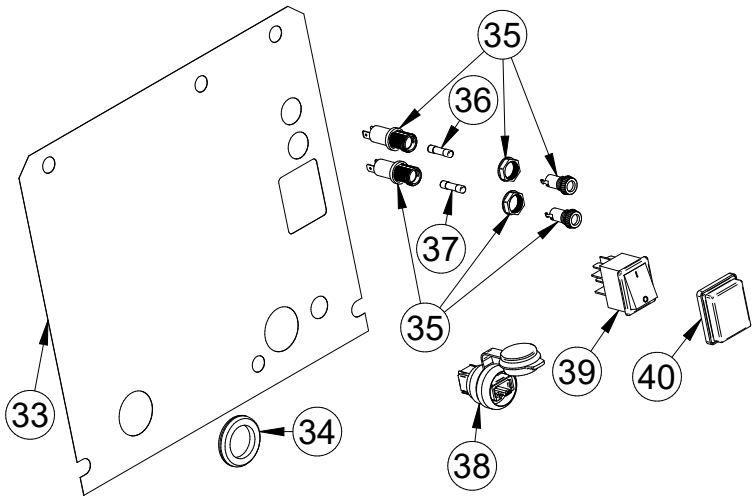

Figure D

Figure D: Rear Assembly

Item	Description	Part Number	QTY	1	2	3	4	5	6	7
33	BACK PANEL DECAL	R-0000-534-1R	1	X	X					
34	PROTECTION RUBBER COVER ADG-30	1361-599-198R	1	X	X					
35	FUSE HOLDER IP67	1158-632-034R	2	X	X					
36	FUSE T 5X20 0,5	1158-660-111R	1	X	X					
37	FUSE T 5X20 1A	1158-660-113R	1	X	X					
38	Ethernet Socket	1159-190-070R	1	X	X					
39	MAIN SWITCH	1115-270-022R	1	X	X					
40	SWITCH COVER AND BEZEL	1115-299-073R	1	X	X					

Miscellaneous Items (not shown in figure A, B, C, D)

Item	Description	Part Number	QTY	1	2	3	4	5	6	7
41	HARNESSES KIT	T-8040-272-1R	1	X	X					

Electrical Schematic

CODE: 50781, 50782

