IM3103
12/2022
REV08

POWERTEC® i350S, i420S, i500S

Spare Parts....1
Figure A, B: Machine Assembly....2
Figure C, D, E: Inside Machine Assembly....6
Figure F: Front Assembly....8
Miscelaneous Items (not shown in figure A, B, C, D, E, F)....8
Electrical Schematic....9
CODE: 50445....9
CODE: 50446....10
CODE: 50447....11
CODE: 50658, 50659, 50660....12

Lincoln Electric Bester Sp. z o.o.
ul. Jana III Sobieskiego 19A, 58-260 Bielawa, Poland
www.lincolnelectric.eu

Spare Parts

SP50445, SP50658, SP50446, SP50659, SP50447, SP50660 REV04
12/2022

ASSEMBLY PAGE NAME			Machine Assembly	Machine Assembly	Inside Machine Assembly	Inside Machine Assembly	Inside Machine Assembly	Front Assembly	Miscellaneous Items
CODE NO.:	**K NO.:**	**FIGURE NO.:**	**A**	**B**	**C**	**D**	**E**	**F**	**-**
50445	K14183-1	POWERTEC® i350S	1	-	1	-	-	1	1
50658			-	2	-	-	2	2	2
50446	K14184-1	POWERTEC® i420S	3	-	-	3	-	3	3
50659			-	4	-	-	4	4	4
50447	K14185-1	POWERTEC® i500S	5	-	-	5	-	5	5
50660			-	6	-	-	6	6	6

*items highlighted in bold are recommended spare parts

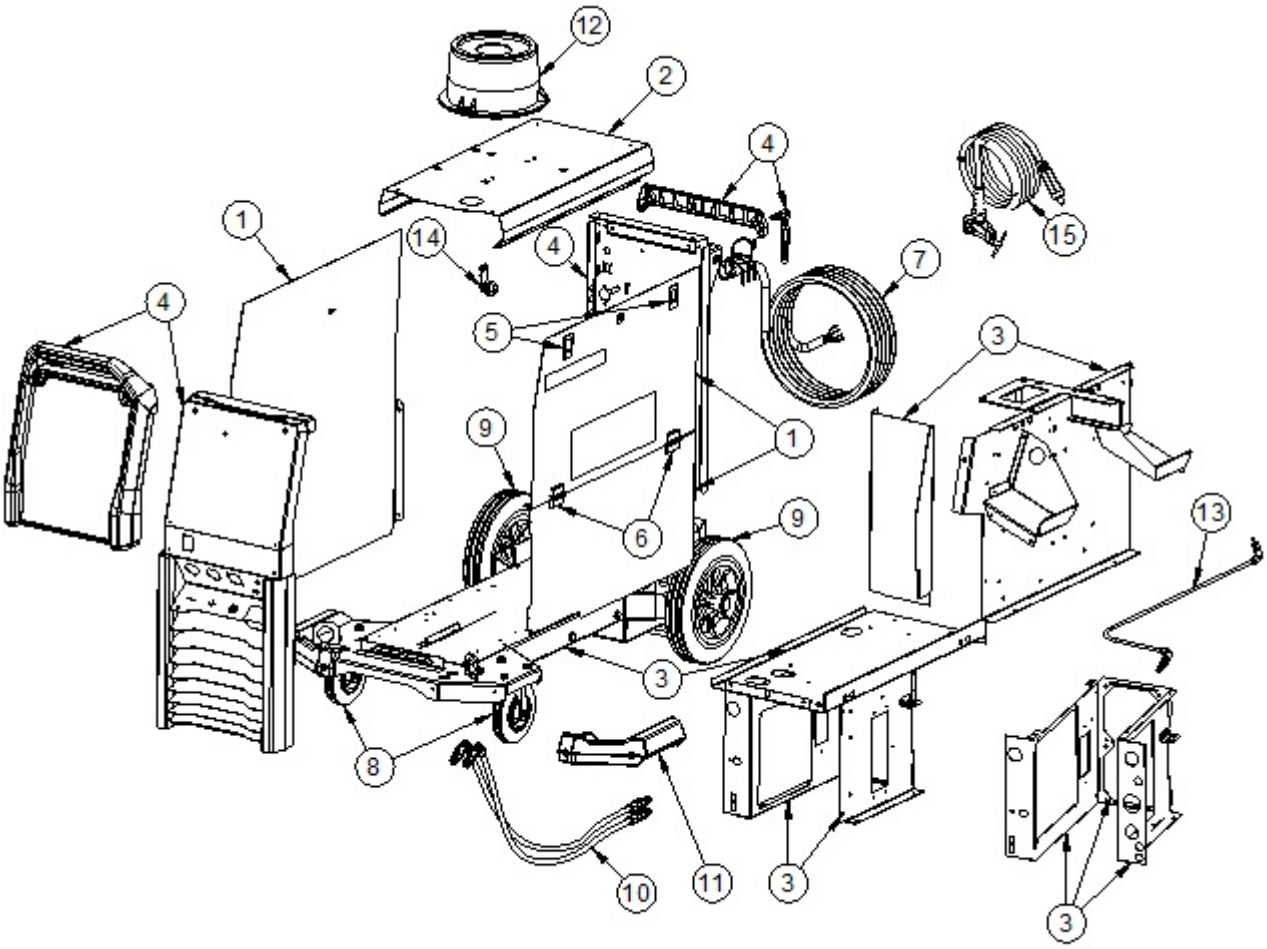

Figure A

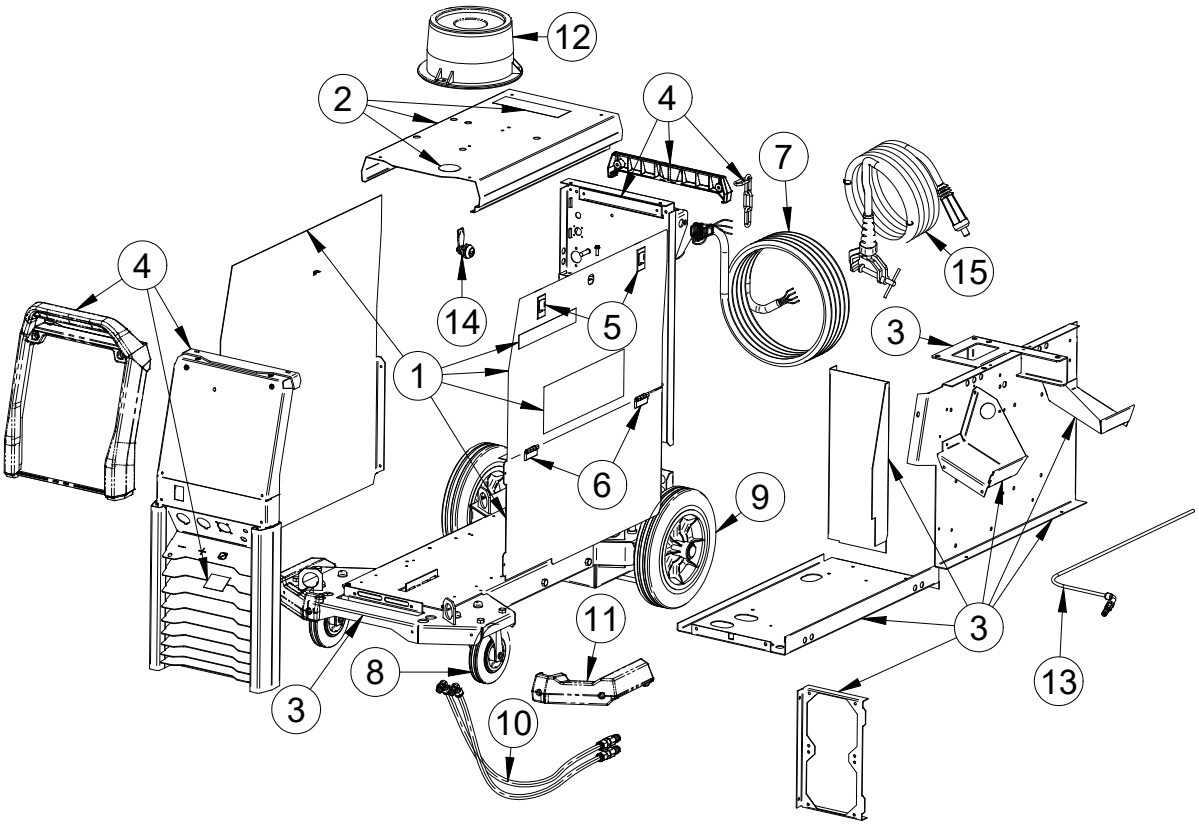

Figure B

Figure A, B: Machine Assembly

Item	Description	Part Number	QTY	1	2	3	4	5	6	7
1	SIDE PANEL KIT includes:	T-8040-028-1R	1	X	X	X	X	X	X	
	LEFT SIDE PANEL		1	X	X	X	X	X	X	
	UPPER SIDE PANEL		1	X	X	X	X	X	X	
	BOTTOM SIDE PANEL		1	X	X	X	X	X	X	
	LABEL - ROLLS COLOURS		1	X	X	X	X	X	X	
2	COVER KIT includes:	T-8040-029-1R	1	X	X	X	X	X	X	
	SHELF		1	X	X	X	X	X	X	
	WARNING LABEL		1	X	X	X	X	X	X	
3	BASE, PARTITION, SHELF KIT includes:	T-8040-030-1R	1	X						
	BASE ASSEMBLY		1	X						
	PARTITION ASSEMBLY		1	X						
	COVER		1	X						
	SHELF		1	X						
	FUSE LABEL		1	X						
	BRACKET		1	X						
3	BASE, PARTITION, SHELF KIT includes:	T-8040-037-1R	1			X		X		
	BASE ASSEMBLY		1			X		X		
	PARTITION ASSEMBLY		1			X		X		
	COVER		1			X		X		
	SHELF		1			X		X		
	FUSE LABEL		1			X		X		
	BRACKET		1			X		X		

3	BASE, PARTITION, SHELF KIT includes:	T-8040-183-1R	1		X		X		X	
	BASE ASSEMBLY		1		X		X		X	
	PARTITION ASSEMBLY		1		X		X		X	
	COVER		1		X		X		X	
	SHELF		1		X		X		X	
	FUSE LABEL		1		X		X		X	
	SHELF		1		X		X		X	
	SHELF		1		X		X		X	
	LEG ASSEMBLY		1		X		X		X	
	PARTITION		1		X		X		X	
4	FRONT AND REAR PANEL KIT:	T-8040-031-1R	1	X						
	FRONT PANEL ASSEMBLY		1	X						
	REAR PANEL ASSEMBLY		1	X						
	IN LABEL		1	X						
	OUT LABEL		1	X						
	IN/OUT LABEL		1	X						
	GAS LABEL		1	X						
	FRONT HANDLE COMPLETE		1	X						
	BACK PANEL CASE		1	X						
	CHAIN		1	X						
4	FRONT AND REAR PANEL KIT:	T-8040-038-1R	1			X		X		
	FRONT PANEL ASSEMBLY		1			X		X		
	REAR PANEL ASSEMBLY		1			X		X		
	IN LABEL		1			X		X		
	OUT LABEL		1			X		X		
	IN/OUT LABEL		1			X		X		
	GAS LABEL		1			X		X		
	FRONT HANDLE COMPLETE		1			X		X		
	BLACK PANEL CASE		1			X		X		
	CHAIN		1			X		X		
4	FRONT AND REAR PANEL KIT:	T-8040-184-1R	1		X		X		X	
	FRONT PANEL ASSEMBLY		1		X		X		X	
	REAR PANEL ASSEMBLY		1		X		X		X	
	LABEL WATER AND GAS		1		X		X		X	
	LABEL		1		X		X		X	
	IN/OUT LABEL		1		X		X		X	
	COVER		1		X		X		X	
	FRONT HANDLE COMPLETE		1		X		X		X	
	BACK PANEL CASE		1		X		X		X	
	CHAIN		1		X		X		X	
	CAP		1		X		X		X	
	HOLE PLUG		1		X		X		X	
5	LOCK	0654-610-004R	2	X	X	X	X	X	X	
6	LEAF HINGE	0654-610-007R	2	X	X	X	X	X	X	
7	MAIN INPUT CORD	R-5041-497-1R	1	X						
	MAIN INPUT CORD	R-5041-497-2R	1			X		X		
	MAIN INPUT CORD	R-5041-654-1R	1				X		X	
	MAIN INPUT CORD	R-5041-654-2R	1		X					

8	TURING WHEEL DIA-125	1029-660-127R	2	X	X	X	X	X	X	
9	WHEEL DIA-250	1029-660-250R	2	X	X	X	X	X	X	
10	WATER CONNECTION KIT:	T-8040-032-1R	1	X						
	COOLING HOSES		2	X						
	COUPLING RECTUS		4	X						
	THREAD ADAPTER		4	X						
	ORIENTING ELBOW MALE ADAPTOR		2	X						
	STRAIGHT MALE ADAPTOR		2	X						
10	WATER CONNECTION KIT:	T-8040-034-1R	1		X	X	X	X	X	
	COOLING HOSES		2		X	X	X	X	X	
	COUPLING RECTUS		4		X	X	X	X	X	
	THREAD ADAPTER		4		X	X	X	X	X	
	ORIENTING ELBOW MALE ADAPTOR		2		X	X	X	X	X	
	STRAIGHT MALE ADAPTOR		2		X	X	X	X	X	
11	BUMPER KIT	T-8040-047-1R	1	X	X	X	X	X	X	
12	SWIVEL BRACKET	1361-598-181R	1	X	X	X	X	X	X	
13	GAS CONNECTION KIT:	T-8040-046-1R	1	X	X	X	X	X	X	
	GAS HOSE		1	X	X	X	X	X	X	
	ELBLOW 1/8 WITH SEAL		2	X	X	X	X	X	X	
	BRASS QUICK CONNECTOR		1	X	X	X	X	X	X	
	BRASS QUICK COUPLING		1	X	X	X	X	X	X	
14	KEY LOCK	0654-610-001R	1	X	X	X	X	X	X	
15	WELDING CABLE	R-5041-024-1R	1	X	X					
	WELDING CABLE	R-5041-024-2R	1			X	X	X	X	

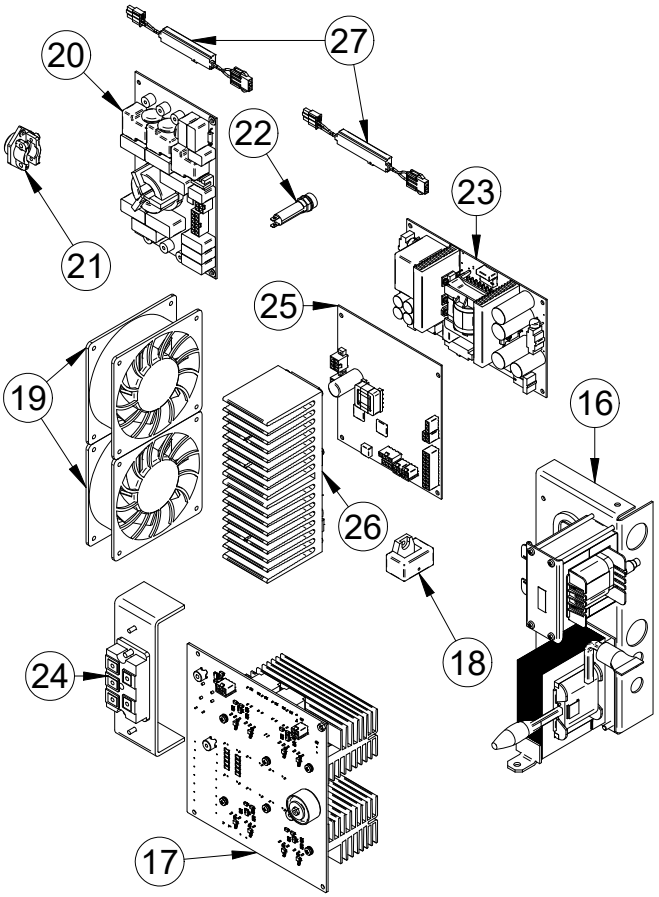

Figure C

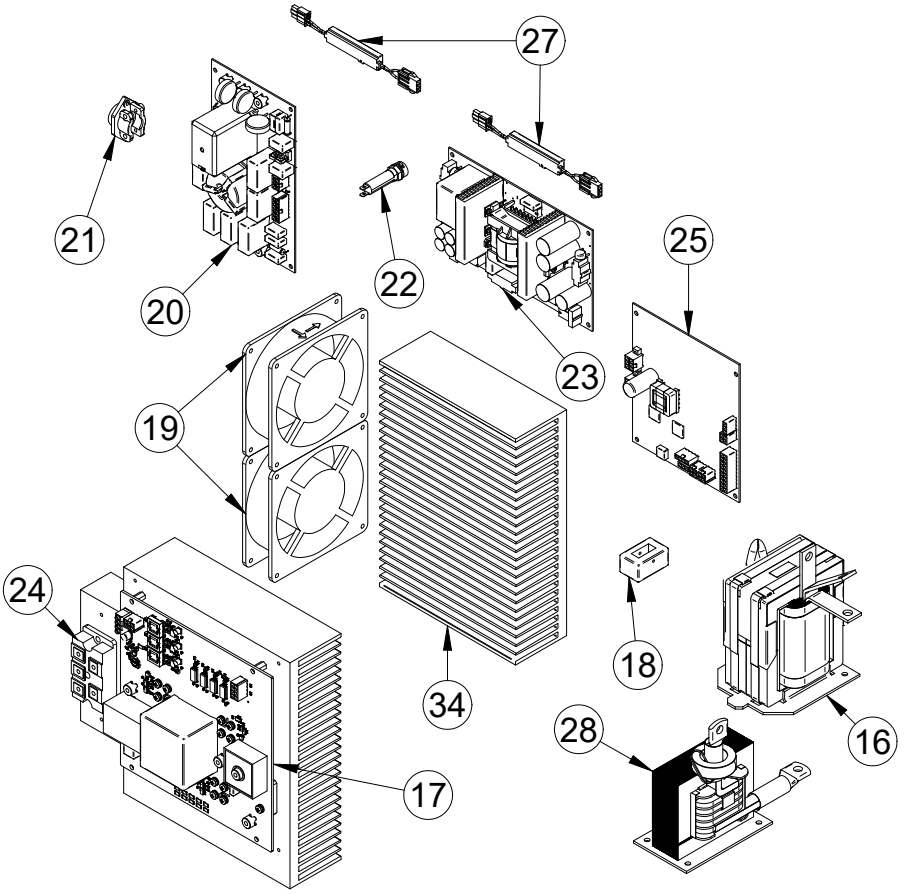

Figure D

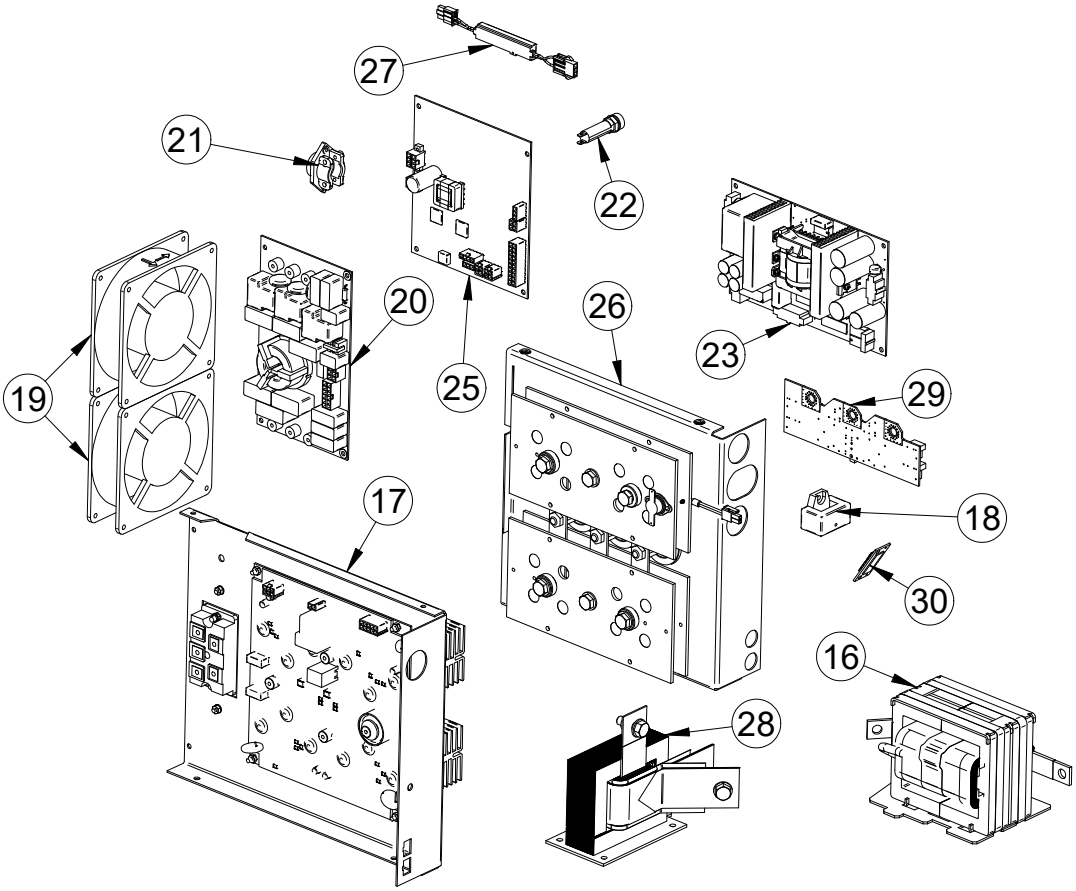

Figure E

Figure C, D, E: Inside Machine Assembly

Item	Description	Part Number	QTY	1	2	3	4	5	6	7
16	TRANSFORMER AND CHOKE	R-8040-420-1R	1	X						
	TRANSFORMER	R-4034-175-2R	1			X		X		
	TRANSFORMER	R-4034-182-1R	1		X		X		X	
17	**INVERTER BOARD**	**R-6042-079-1R**	**1**	**X**						
	INVERTER BOARD	**T-8040-022-1R**	**1**			**X**		**X**		
	INVERTER BOARD ASSEMBLY	**R-8040-508-1R**	**1**				**X**		**X**	
	INVERTER BOARD ASSEMBLY	**R-8040-508-2R**	**1**		**X**					
18	HALL SENSOR	W4900004R	1	X	X	X	X	X	X	
19	**FAN**	**R-8040-433-1R**	**2**	**X**						
	FAN	**W66X1369R**	**2**		**X**	**X**	**X**	**X**	**X**	
20	**INPUT FILTER**	**Y051-1R**	**1**	**X**	**X**					
	INPUT FILTER	**Y056-1R**	**1**			**X**	**X**	**X**	**X**	
21	CABLE RELIEF	1361-599-674R	1	X	X	X	X	X	X	
22	FUSE SOCKET	1158-632-032R	1	X	X	X	X	X	X	
	FUSE 2A 400V	1158-660-010R	1	X	X	X	X	X	X	
23	**SUPPLY PC BOARD**	**R-6042-081-1R**	**1**	**X**	**X**	**X**	**X**	**X**	**X**	
24	**THREE PHASE BRIDGE**	**W4100021R**	**1**	**X**		**X**		**X**		
25	**CONTROL BOARD**	**R-6042-091-1R**	**1**	**X**						
	CONTROL BOARD	**R-6042-092-1R**	**1**			**X**				
	CONTROL BOARD	**R-6042-093-1R**	**1**					**X**		
	CONTROL BOARD	**R-6042-121-2R**	**1**		**X**					
	CONTROL BOARD	**R-6042-122-2R**	**1**				**X**			
	CONTROL BOARD	**R-6042-123-2R**	**1**						**X**	

26	OUTPUT BRIDGE	R-8040-388-1R	1	X						
	HEATSINK KIT	T-8040-023-1R	1			X				
	HEATSINK KIT	T-8040-033-1R	1					X		
	OUTPUT BRIDGE	R-8040-499-1R	1				X		X	
	OUTPUT BRIDGE	R-8040-499-2R	1		X					
27	LED MODULE	R-5041-508-1R	2	X	X	X	X	X	X	
28	CHOKE	R-8040-441-1R	1			X		X		
28	CHOKE	R-8040-513-1R	1		X		X		X	
29	OUTPUT AND FILTER BOARD (PTi)	Y087-1R	1		X		X		X	
30	OUTPUT EMC-FILTER	Y097-2R	1		X		X		X	

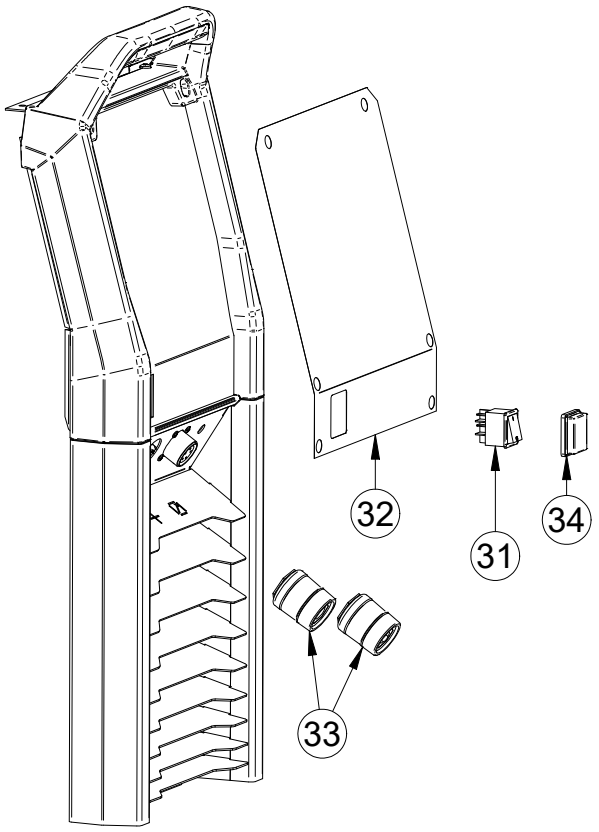

Figure F

Figure F: Front Assembly

Item	Description	Part Number	QTY	1	2	3	4	5	6	7
31	MAIN SWITCH	**1115-270-022R**	1	X	X	X	X	X	X	
32	FRONT LABEL	R-0000-079-1R	1	X	X					
	FRONT LABEL	R-0000-080-1R	1			X	X			
	FRONT LABEL	R-0000-081-1R	1					X	X	
33	SOCKET	2EINN0500FR	2	X	X					
	SOCKET	90000595PR	2			X	X	X	X	
34	SWITCH COVER AND BEZEL	1115-299-073R	1	X	X	X	X	X	X	

Miscelaneous Items (not shown in figure A, B, C, D, E, F)

Item	Description	Part Number	QTY	1	2	3	4	5	6	7
35	HARNESSES KIT	T-8040-035-1R	1	X						
36	HARNESSES KIT	T-8040-036-1R	1			X		X		
37	HARNESSES KIT	T-8040-187-1R	1		X					
38	HARNESSES KIT	T-8040-187-2R	1				X		X	

Electrical Schematic

CODE: 50445

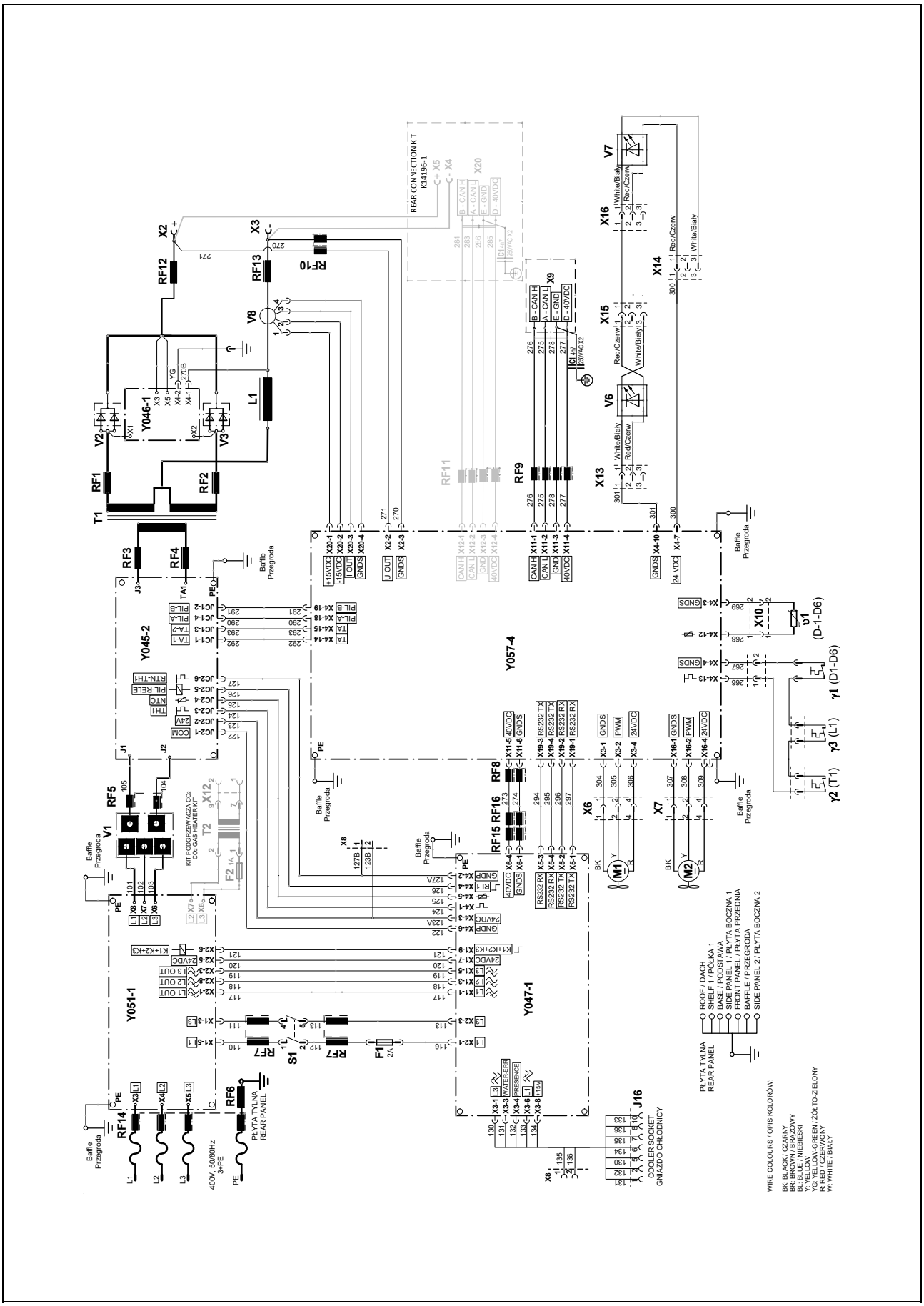

CODE: 50446

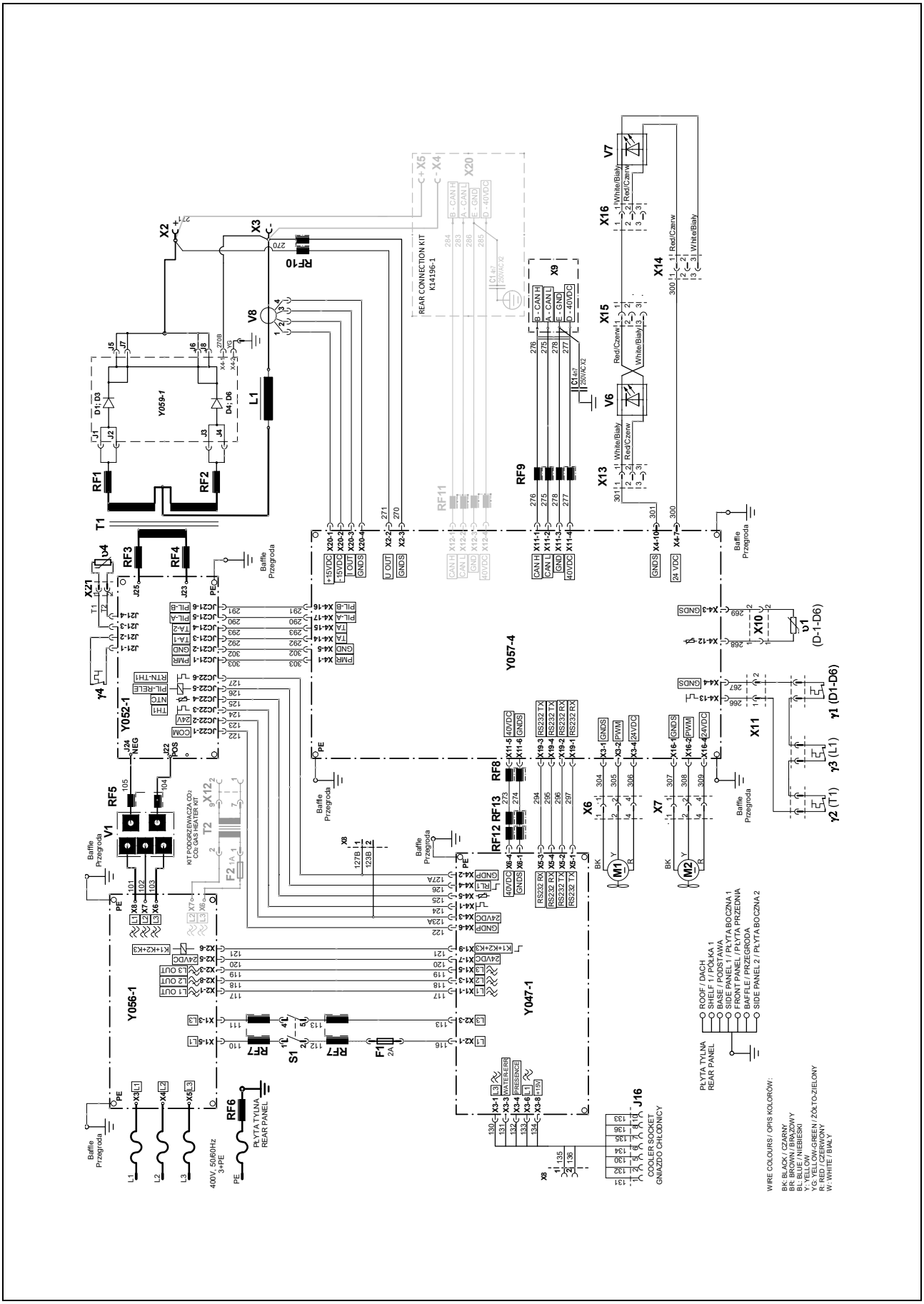
REAR CONNECTION KIT
K14196-1
KIT PODGRZEWACZA CO:
CO GAS HEATER KIT
Baffle Przegroda
PŁYTA TYLNA
REAR PANEL
400V, 50/60Hz
3+PE
COOLER SOCKET
GNIAZDO CHŁODNICY
ROOF / DACH
SHELF 1 / PÓŁKA 1
BASE / PODSTAWA
SIDE PANEL 1 / PŁYTA BOCZNA 1
FRONT PANEL / PŁYTA PRZEDNIA
BAFFLE / PRZEGRODA
SIDE PANEL 2 / PŁYTA BOCZNA 2
WIRE COLOURS / OPIS KOLORÓW:
BK: BLACK / CZARNY
BR: BROWN / BRĄZOWY
BL: BLUE / NIEBIESKI
Y: YELLOW
Y/G: YELLOW/GREEN / ŻÓŁTO-ZIELONY
R: RED / CZERWONY
W: WHITE / BIAŁY

CODE: 50447

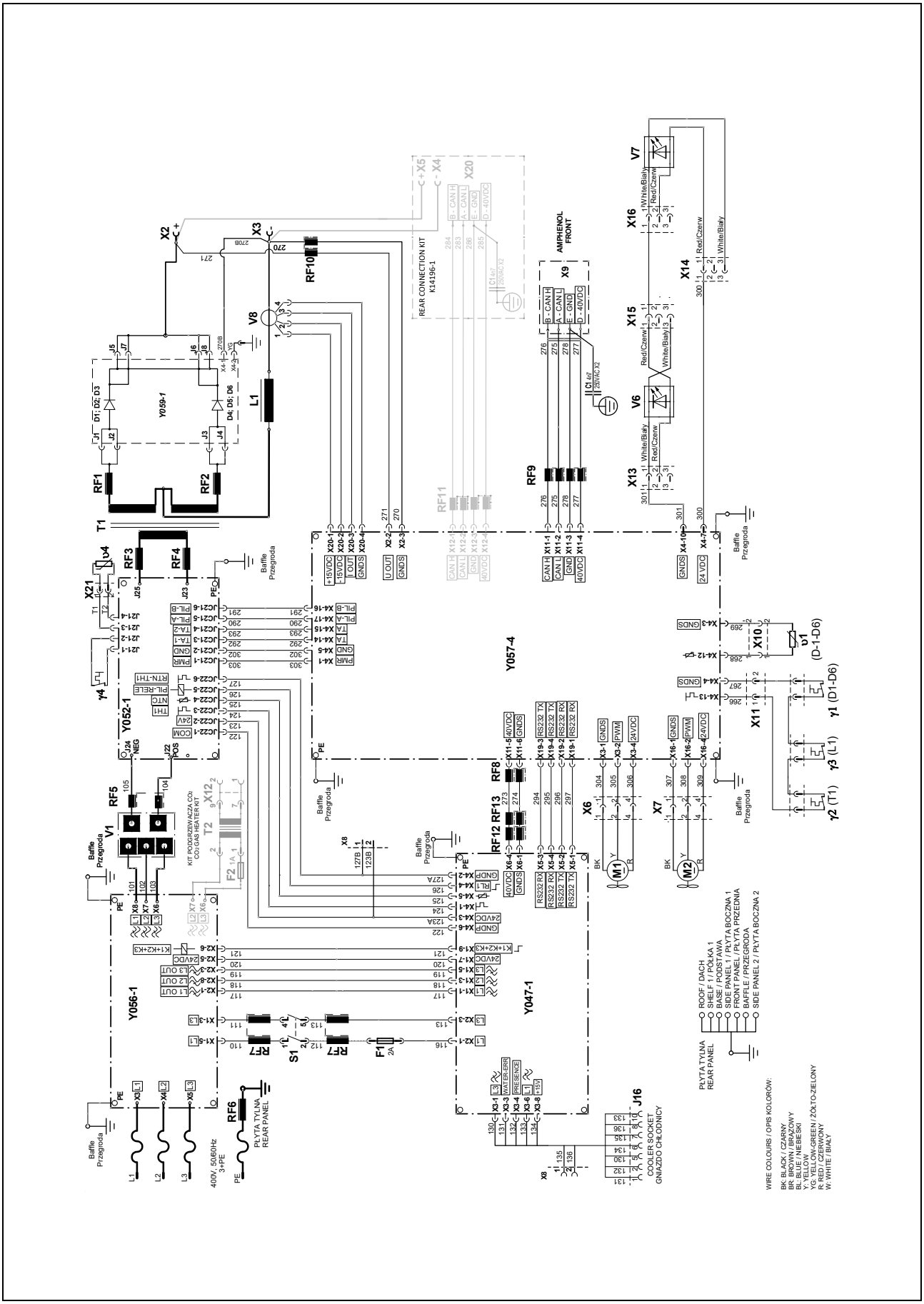
REAR CONNECTION KIT
K14196-1
AMPHENOL
FRONT
Y059-1
Y052-1
Y056-1
Y057-4
Y047-1
KIT PODGRZEW.ACZA CO2
CO2 GAS HEATER KIT
PLYTA TYLNA
REAR PANEL
COOLER SOCKET
GNIAZDO CHŁODNICY
400V, 50/60Hz
3+PE
Baffle
Przegroda
ROOF / DACH
SHELF 1 / POŁKA 1
BASE / PODSTAWA
SIDE PANEL 1 / PŁYTA BOCZNA 1
FRONT PANEL / PŁYTA PRZEDNIA
BAFFLE / PRZEGRODA
SIDE PANEL 2 / PŁYTA BOCZNA 2
WIRE COLOURS / OPIS KOLORÓW:
BK: BLACK / CZARNY
BR: BROWN / BRĄZOWY
BL: BLUE / NIEBIESKI
Y: YELLOW
YG: YELLOW/GREEN / ŻÓŁTO-ZIELONY
R: RED / CZERWONY
W: WHITE / BIAŁY
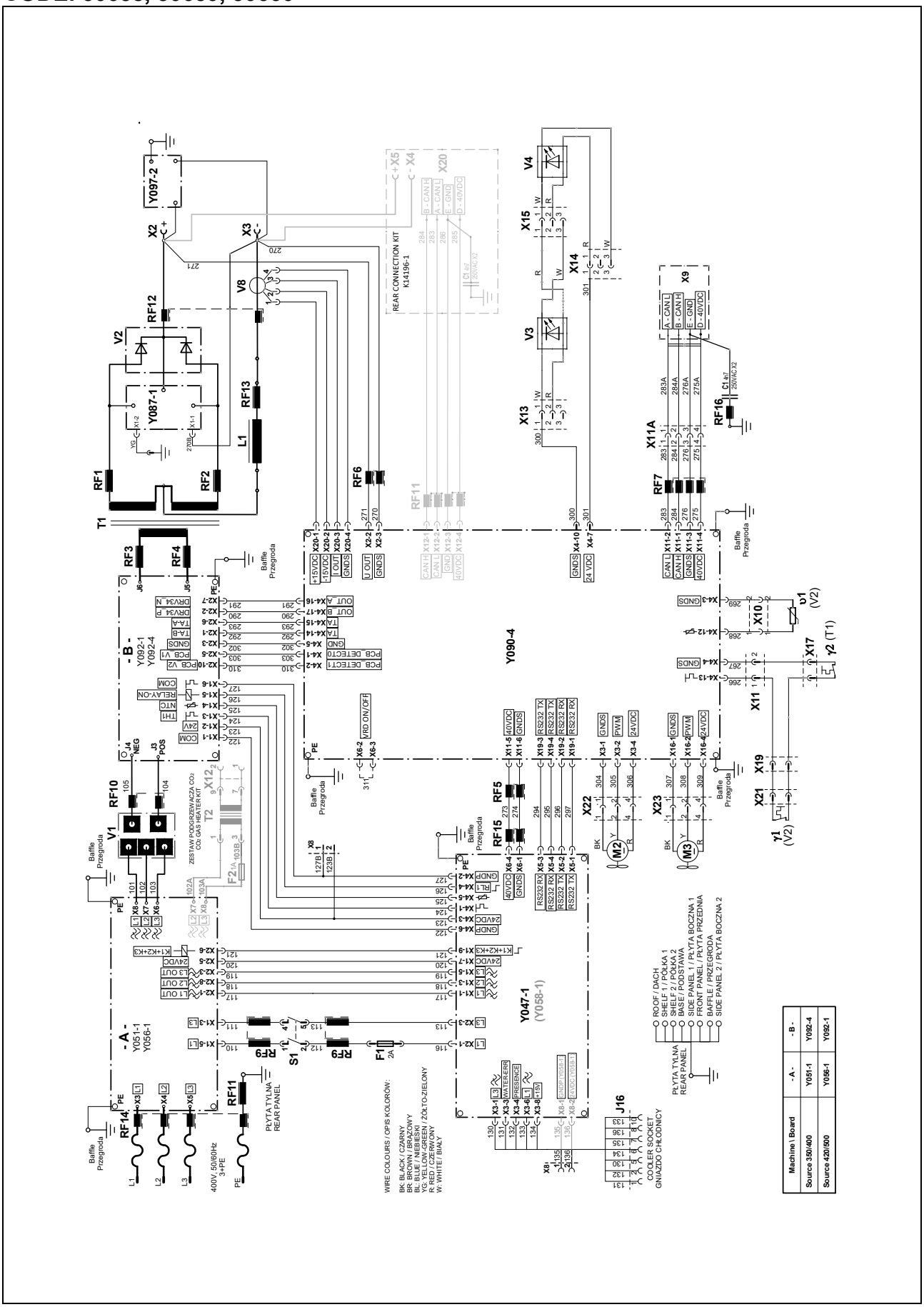
CODE: 50658, 50659, 50660